PARTS
ILLUSTRATIONS

5x5 NG+4
MOUNTED

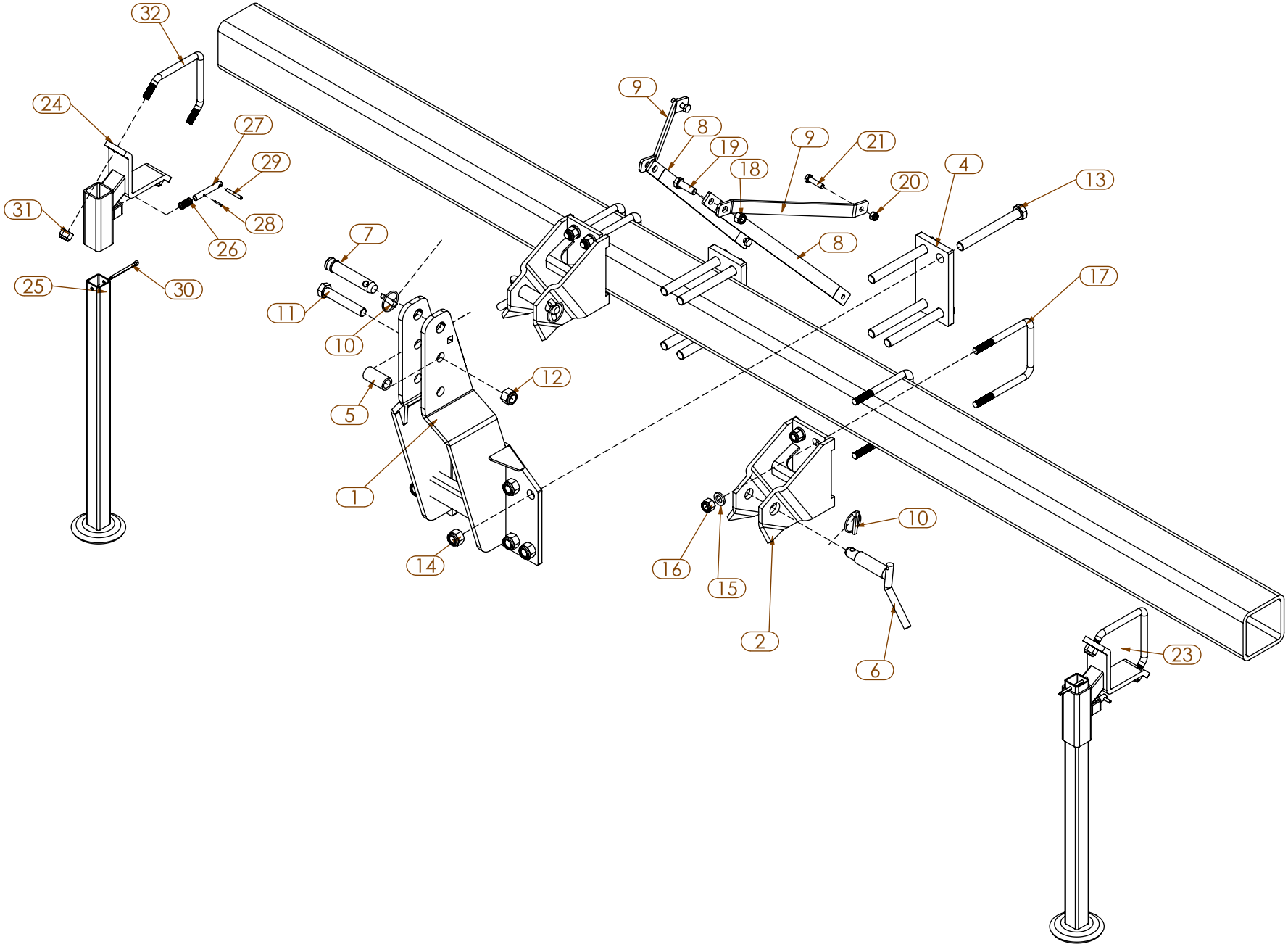
32
24
27
29
31
28
26
25
30
7
11
10
5
12
1
14
9
8
19
18
9
21
20
8
4
13
17
10
16
15
2
6
23

ITEM	PART NUMBER	DESCRIPTION
1	4530.2	HITCH
2	4531.1	LOWER 3 PT BRACKET L
3	4531.2	LOWER 3 PT BRACKET R
4	4585	REINFORCED HITCH PLATE
5	4587	BUSHING, 20 X 30 X 60
6	4535.2	LOWER HITCH PIN, CAT II
7	4480.2	UPPER HITCH PIN 1" DIA
8	4532	STRAP, 22-1/4
9	4532.1	STRAP, 9.25
10	11476.1	LYNCHPIN w/CHAIN
11	H-6451	BOLT, HEX, 3/4"-10 X 4-1/2" G8
12	N-6101	NUT, NYLOCK 3/4"-10 G8
13	4586	BOLT, 20 X 180
14	NM-72005	NUT, NYLOCK, 20mm, G8.8
15	10622069	WASHER, FLAT, 17.5 X 30 X 4
16	NM-51605	NUT, NYLOCK, 16mm, G8.8
17	4502.SS	U-BOLT, 5 X 5 X 5/8
18	NM-41205	NUT, NYLOCK, 14mm, G8.8
19	HM-71445	HEX, BOLT, 14 X 45, G8.8
20	NM-21015	NUT, NYLOCK, 10mm, G8.8
21	HM-41040	HEX, BOLT, 10 X 40, G8.8
22	HM-41035	HEX, BOLT, 10 X 35, G8.8
23	640838	5 X 5 JACKSTAND
24	4541	BRACKET
25	4540	STAND
26	6904	SPRING
27	11456	PIN
28	10172021	ROLL PIN, 3 X 20mm
29	10172094	ROLL PIN, 6 X 45mm
30	10170098	SPLIT PIN, 6 X 70mm
31	NM-51605	NUT, NYLOCK, 16mm, G8.8
32	4501.SA	V-BOLT, 5 X 5 X 5/8"-11

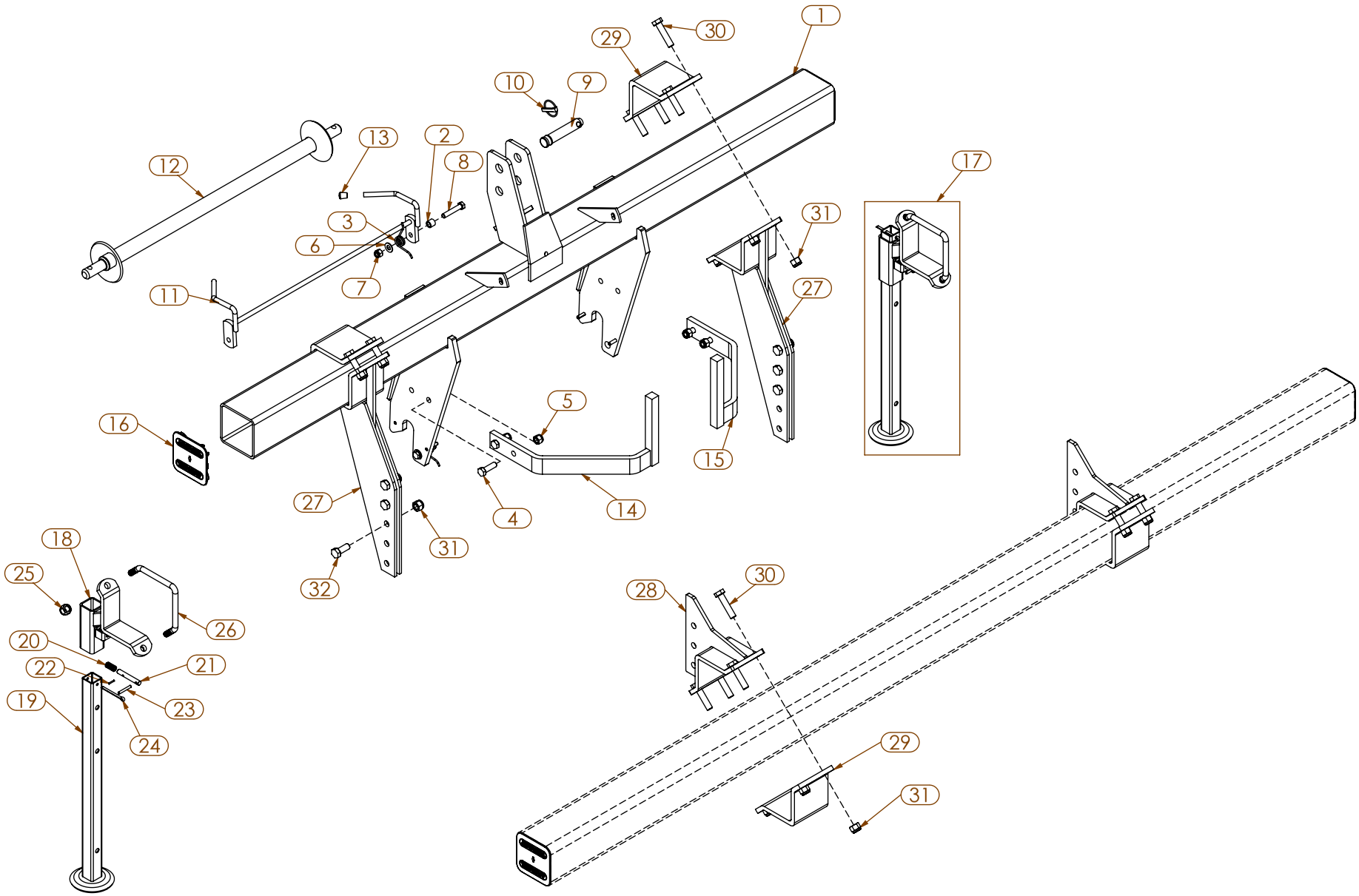
1
2
3
4
5
6
7
8
9
10
11
12
13
14
15
16
17
18
19
20
21
22
23
24
25
26
27
28
29
30
31
32

ITEM	PART NUMBER	DESCRIPTION
1	4603.A	UPPER BAR ADVANCED HITCH
2	4369	SLEEVE LOCKING ROD
3	4370	SPRING
4	HM-71445	HEX, BOLT, 14 X 45, G8.8
5	NM-41205	NUT, NYLOCK, 14mm, G8.8
6	10621046	WASHER, FLAT, 13 X 27 X 2
7	NM-31205	NUT, NYLOCK, 12mm, G8.8
8	HM-61265	HEX, BOLT, 12 X 65, G10.9
9	4480.2	UPPER HITCH PIN 1" DIA
10	11476.1	LYNCHPIN w/CHAIN
11	4366.C	LOCKING ROD
12	4365.A	HITCH BAR
13	4549	CAP
14	4604.1	SUPPORT BRACKET L
15	4604.2	SUPPORT BRACKET R
16	4517	5 X 5 ENDCAP
17	640838	5 X 5 JACKSTAND
18	4541	BRACKET
19	4540	STAND
20	6904	SPRING
21	11456	PIN
22	10172021	ROLL PIN, 3 X 20mm
23	10172094	ROLL PIN, 6 X 45mm
24	10170098	SPLIT PIN, 6 X 70mm
25	NM-51605	NUT, NYLOCK, 16mm, G8.8
26	4501.SA	V-BOLT, 5 X 5 X 5/8"-11
27	4606.1	UPPER DRIVE CLAMP FRONT
28	4606.2	LOWER DRIVE CLAMP FRONT
29	1534.A	CLAMP, 5 X 5
30	HM-81670	HEX, BOLT, 16 X 70, G8.8
31	NM-51605	NUT, NYLOCK, 16mm, G8.8
32	HM-81640	HEX, BOLT, 16 X 40, G8.8

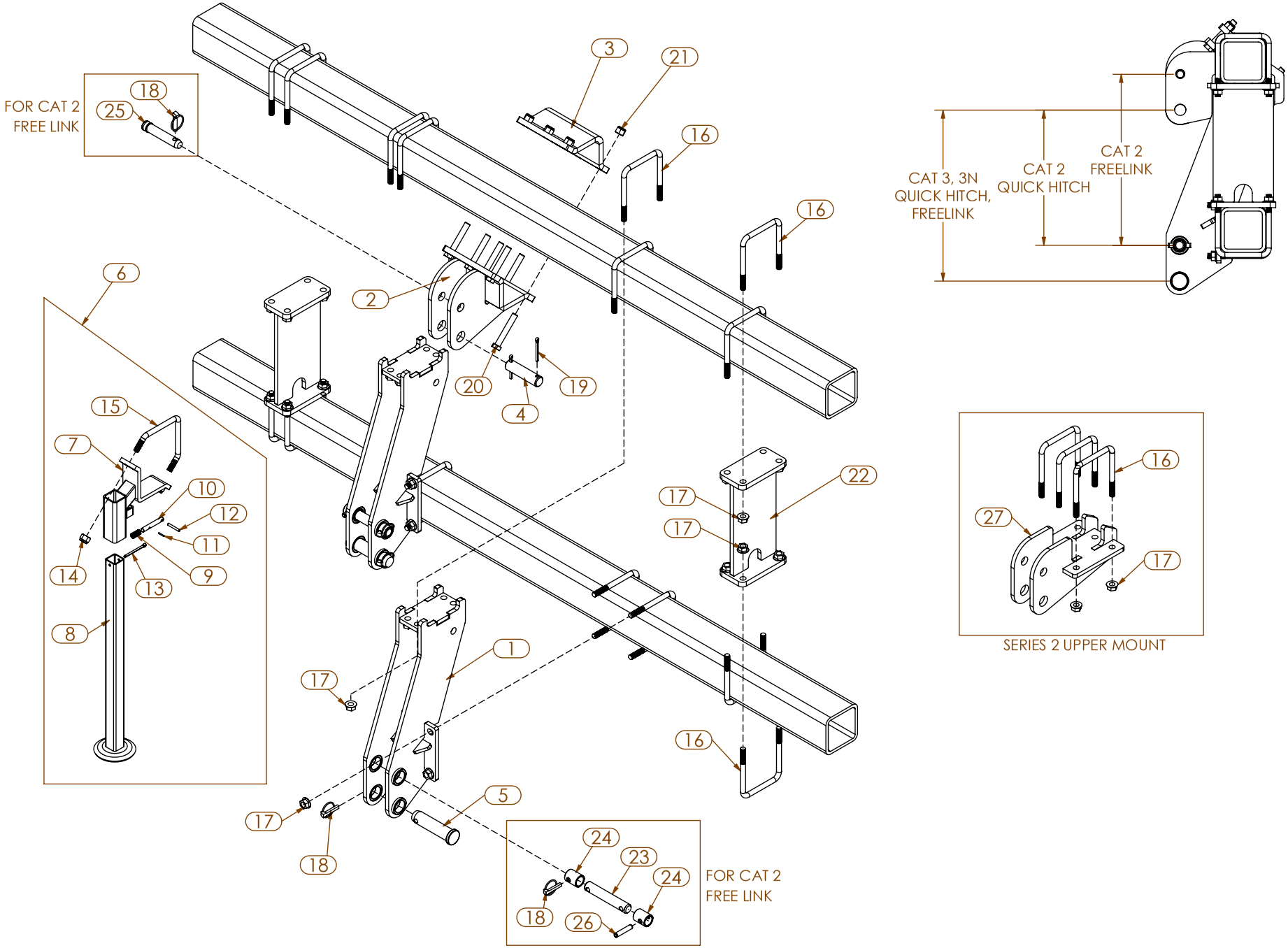
FOR CAT 2
FREE LINK
18
25
3
21
16
16
6
2
20
19
4
15
7
10
12
11
9
14
13
8
17
17
22
1
17
16
5
17
18
24
23
24
18
26
FOR CAT 2
FREE LINK
CAT 3, 3N
QUICK HITCH,
FREELINK
CAT 2
QUICK HITCH
CAT 2
FREELINK
16
27
17
SERIES 2 UPPER MOUNT

ITEM	PART NUMBER	DESCRIPTION
1	201149	5 X 5 HITCH COMBO WA
2	200188	3 PT. UPPER MOUNT
3	802911	V-CLAMP, 5 X 5
4	801245	CAT 3 UPPER HITCH PIN
5	301136	HITCH PIN, CAT 3 LOWER NON HT
6	640838	5 X 5 JACKSTAND
7	4541	BRACKET
8	4540	STAND
9	6904	SPRING
10	11456	PIN
11	10172021	ROLL PIN, 3 X 20mm
12	10172094	ROLL PIN, 6 X 45mm
13	10170098	SPLIT PIN, 6 X 70mm
14	NM-51605	NUT, NYLOCK, 16mm, G8.8
15	4501.sa	V-BOLT, 5 X 5 X 5/8"-11
16	4502.SS	U-BOLT, 5 X 5 X 5/8
17	N-5401	NUT, FLANGE, 5/8"-11
18	O104-036	LYNCH PIN, 7/16"
19	O104-022	SPLIT PIN, 1/4" X 2-1/2"
20	H-5401	BOLT, HEX, 5/8"-11 X 4" G5
21	N-5101	NUT, NYLOCK, 5/8"-11 G8
22	201150	HITCH SPACER WA, 5X5 COMBO
23	804273	HITCH PIN, CAT 2 LOWER
24	804274	CAT 2-3 ADAPTER SLEEVE
25	4480.2	UPPER HITCH PIN 1" DIA
26	O104-102	ROLL PIN, 1/2" X 2-1/2"
27	201252	3 PT. UPPER MOUNT

5X5 HITCH COMBO SET BACK

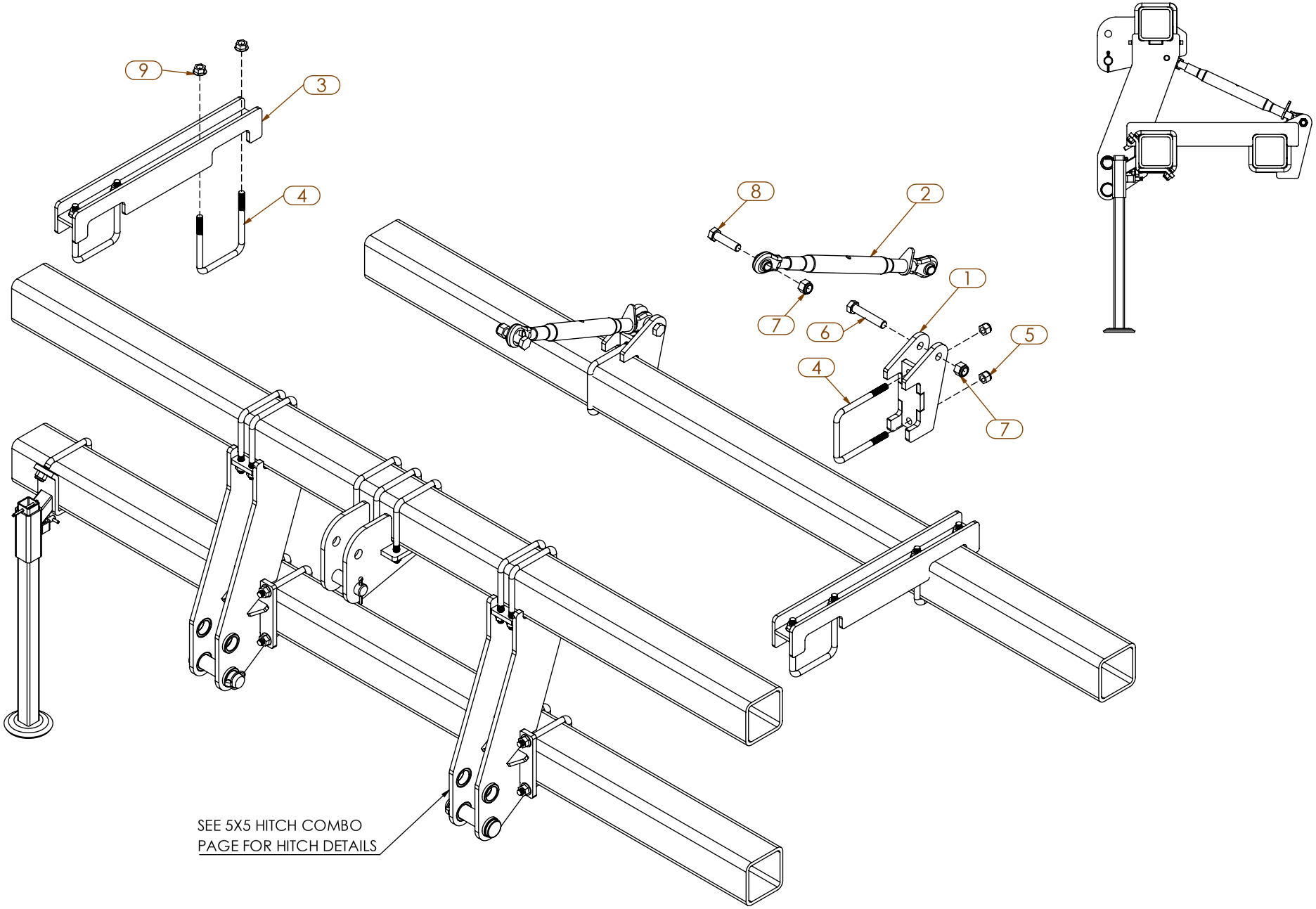

ITEM	PART NUMBER	DESCRIPTION
1	201189	TIE BACK BRACKET WA, 5 IN
2	301159	CAT 1 ADJUSTABLE LINK
3	201324	5 X 5 TOOLBAR SPACER, 12"
4	4502.SS	U-BOLT, 5 X 5 X 5/8
5	N-5101	NUT, NYLOCK, 5/8"-11 G8
6	H-6401	BOLT, HEX, 3/4"-10 X 4" G8
7	N-6101	NUT, NYLOCK 3/4"-10 G8
8	H-6301	BOLT, HEX, 3/4"-10 X 3" G8
9	N-5401	NUT, FLANGE, 5/8"-11

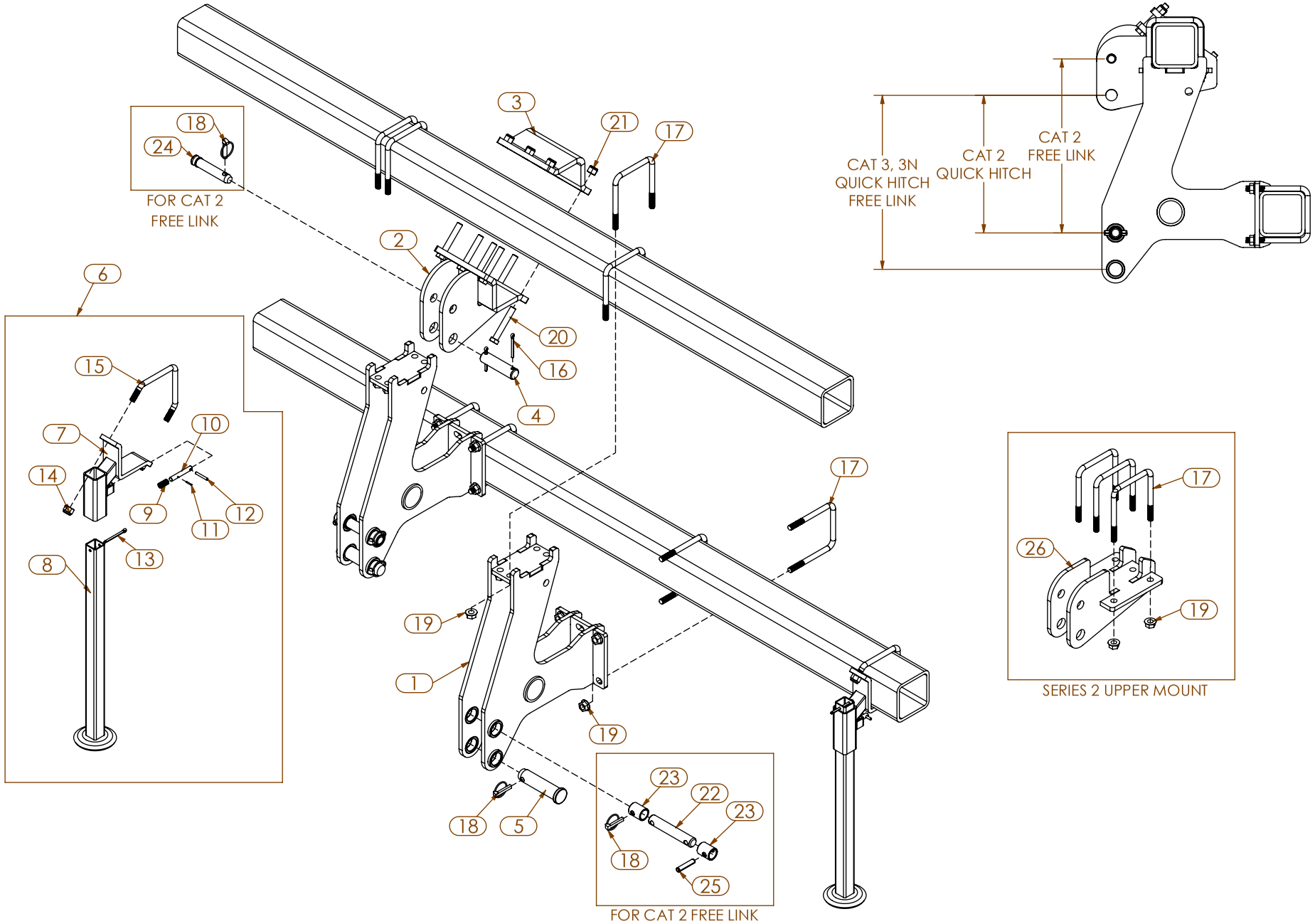
FOR CAT 2 FREE LINK
CAT 3, 3N QUICK HITCH FREE LINK
CAT 2 QUICK HITCH
CAT 2 FREE LINK
SERIES 2 UPPER MOUNT
FOR CAT 2 FREE LINK
1
2
3
4
5
6
7
8
9
10
11
12
13
14
15
16
17
18
19
20
21
22
23
24
25
26

ITEM	PART NUMBER	DESCRIPTION
1	201151	5X5 DOUBLE TOOLBAR HITCH WA
2	200188	3 PT. UPPER MOUNT
3	802911	V-CLAMP, 5 X 5
4	801245	CAT 3 UPPER HITCH PIN
5	301136	HITCH PIN, CAT 3 LOWER NON HT
6	640838	5 X 5 JACKSTAND
7	4541	BRACKET
8	4540	STAND
9	6904	SPRING
10	11456	PIN
11	10172021	ROLL PIN, 3 X 20mm
12	10172094	ROLL PIN, 6 X 45mm
13	10170098	SPLIT PIN, 6 X 70mm
14	NM-51605	NUT, NYLOCK, 16mm, G8.8
15	4501.SA	V-BOLT, 5 X 5 X 5/8"-11
16	O104-022	SPLIT PIN, 1/4" X 2-1/2"
17	4502.SS	U-BOLT, 5 X 5 X 5/8
18	O104-036	LYNCH PIN, 7/16"
19	N-5401	NUT, FLANGE, 5/8"-11
20	H-5401	BOLT, HEX, 5/8"-11 X 4" G5
21	N-5101	NUT, NYLOCK, 5/8"-11 G8
22	804273	HITCH PIN, CAT 2 LOWER
23	804274	CAT 2-3 ADAPTER SLEEVE
24	4480.2	UPPER HITCH PIN 1" DIA
25	O104-102	ROLL PIN, 1/2" X 2-1/2"
26	201252	3 PT. UPPER MOUNT

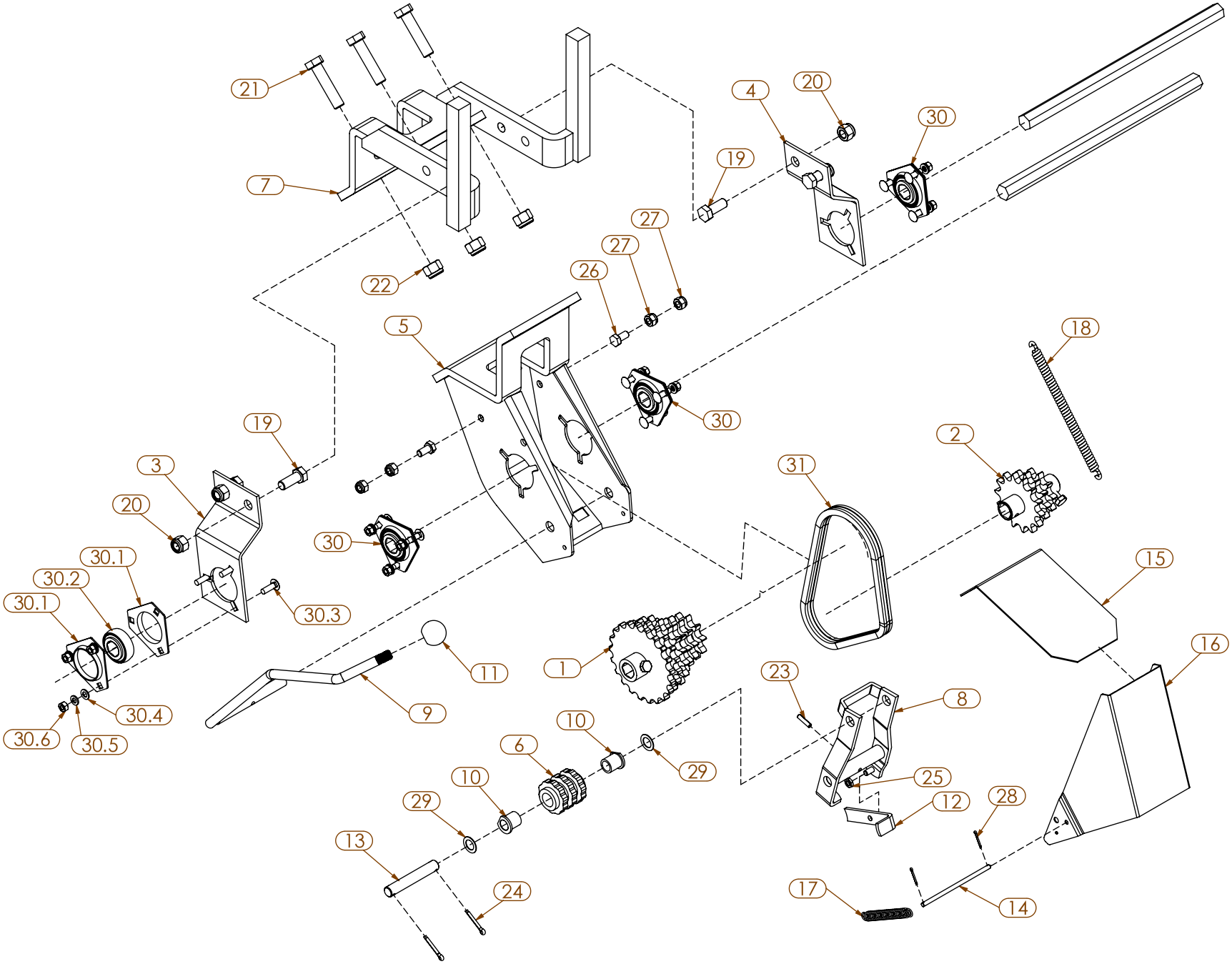
21
7
22
4
20
30
19
27
27
26
5
30
18
19
3
20
30
30.1
30.2
30.1
30.3
30.4
30.6
30.5
9
11
1
31
2
15
16
23
8
10
6
29
10
29
25
12
28
13
24
17
14

ITEM	PART NUMBER	DESCRIPTION
1	4326.4	UPPER SPROCKET CLUSTER (10-11-13-17-19-21 TOOTH)
2	4325.C	LOWER SPROCKET CLUSTER (10-12-14 TOOTH)
3	4522.1A	LEFT SUPPORT BRACKET (FOR HEX SHAFT)
4	4522.2A	RIGHT SUPPORT BRACKET (FOR HEX SHAFT)
5	4507.C	GEARBOX HOUSING
6	4511.B	CHAIN TIGHTENER ROLLER
7	4539.B	GEARBOX MOUNTING BRACKET WITH TURBOFAN STAND
8	4508.B	GEARBOX LEVER
9	4510.B	GEARBOX HANDLE
10	5021	SELF LUBRICATING BUSHING
11	4584	KNOB FOR HANDLE
12	4509.B	LEVER LOCK
13	4512.A	PIN
14	4537	PIN FOR GEARBOX DOOR
15	4621	SHIELD, GEARBOX
16	4519	GEARBOX DOOR
17	5501	SPRING (R125)
18	9147	SPRING, FOR TIGHTENING DRIVE CHAIN
19	HM-71435	HEX, BOLT, 14 X 35, G8.8
20	NM-41205	NUT, NYLOCK, 14mm, G8.8
21	HM-81670	HEX, BOLT, 16 X 70, G8.8
22	NM-51605	NUT, NYLOCK, 16mm, G8.8
23	10172090	ROLL PIN, 6 X 25mm
24	10170066	SPLIT PIN, 5 X 35 MM
25	NM-1810	NUT, HEX, JAM, 8mm, G8.8
26	HM-41020	HEX, BOLT, 10 X 20, G8.8
27	NM-21015	NUT, NYLOCK, 10mm, G8.8
28	10170014	SPLIT PIN, 2.5 X 20mm
29	10622024	WASHER, FLAT, 16.5 X 26 X 1

ITEM	PART NUMBER	DESCRIPTION
30	180039	BEARING, COMPLETE w/ FLANGE
30.1	300596	FLANGETTE
30.2	300597	BEARING, 7/8" HEX
30.3	CB-1110	BOLT, CARR., 5/16"-18 X 1.00, G5
30.4	W-1410	WASHER, FLAT, 5/16" SAE G8
30.5	W-1610	WASHER, SPLIT, 5/16", G8
30.6	N-1001	NUT, HEX, 5/16"-18, G5
31	4327.A	CHAIN, 13N, 36 LINKS

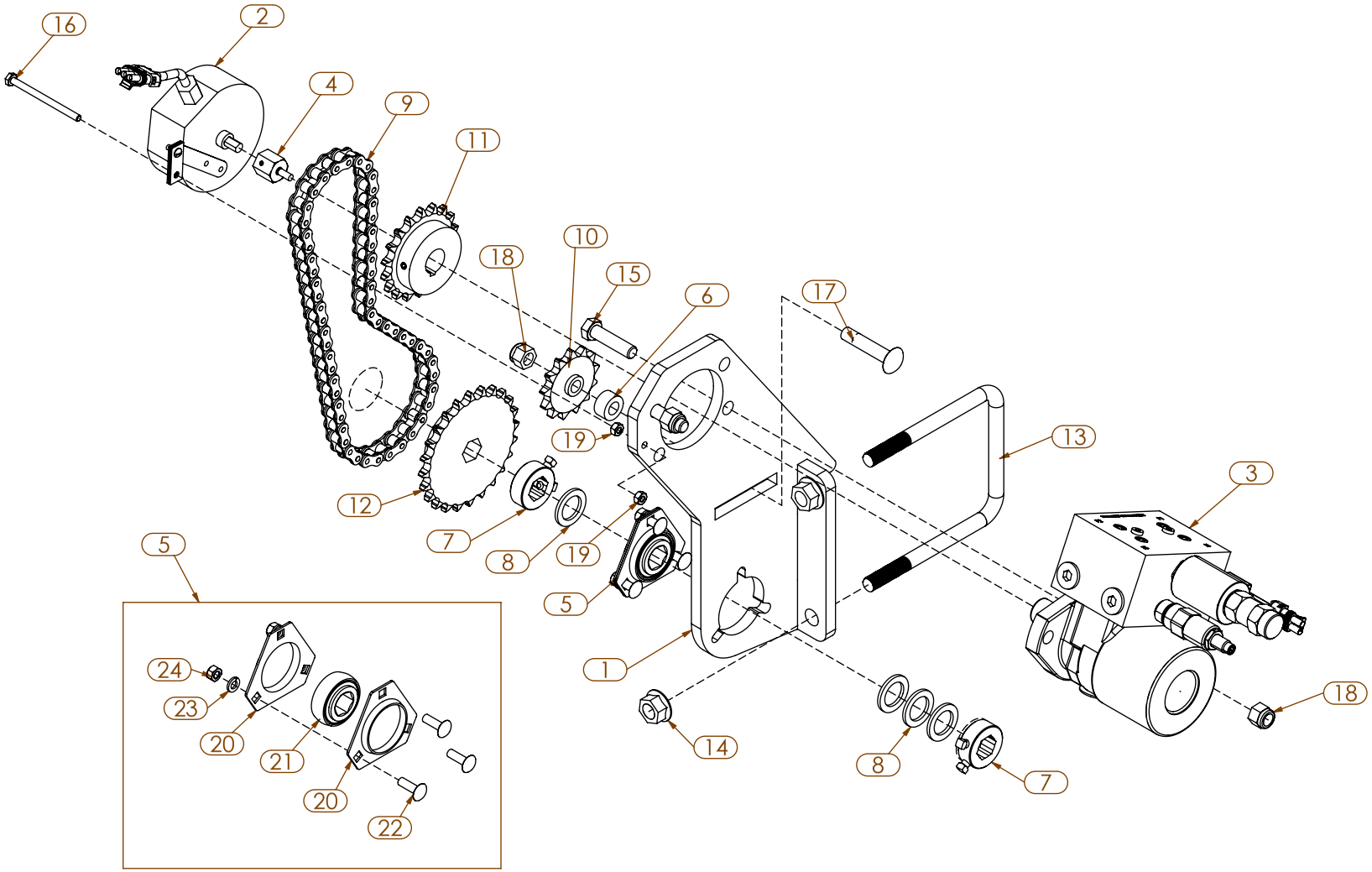
16
2
4
9
11
10
18
15
6
17
19
13
3
12
7
8
19
5
5
1
24
23
20
21
20
22
14
8
7
18

ITEM	PART NUMBER	DESCRIPTION
1	201158	5X5 METER DRIVE MOTOR MNT WA
2	INT1410	RATE SENSOR, 1' CABLE
3	INT1925	HYDRAULIC MOTOR
4	100263	COUPLER ASM, DJ APT RATE SENSOR
5	180039	BEARING, COMPLETE w/ FLANGE
6	802203	BUSHING 1" X .531" X .563" L
7	100288	HEX STOP
8	K10233	BUSHING, 1.50 X 1.00 X .125
9	300486	CHAIN, #50, 56P, HYD. DR. STD.
10	G5013E	SPROCKET, #50, 13T, 1/2" BO
11	G50BS18	SPROCKET, #50, 18T
12	G50B24	SPROCKET, #50, 24T
13	4502.SS	U-BOLT, 5 X 5 X 5/8
14	N-5401	NUT, FLANGE, 5/8"-11
15	H-4201	BOLT, HEX, 1/2"-13 X 2" G8
16	H-1350	BOLT, HEX, 1/4"-20 X 3-1/2" G5
17	CB-4425	BOLT, CARR., 1/2"-13 X 2.50, G5
18	N-4101	NUT, NYLOCK 1/2"-13 G8
19	N-0601	NUT, HEX, 1/4-20, G8
20	300596	FLANGETTE
21	300597	BEARING, 7/8" HEX
22	CB-1110	BOLT, CARR., 5/16"-18 X 1.00, G5
23	W-1610	WASHER, SPLIT, 5/16", G8
24	N-1001	NUT, HEX, 5/16"-18, G5

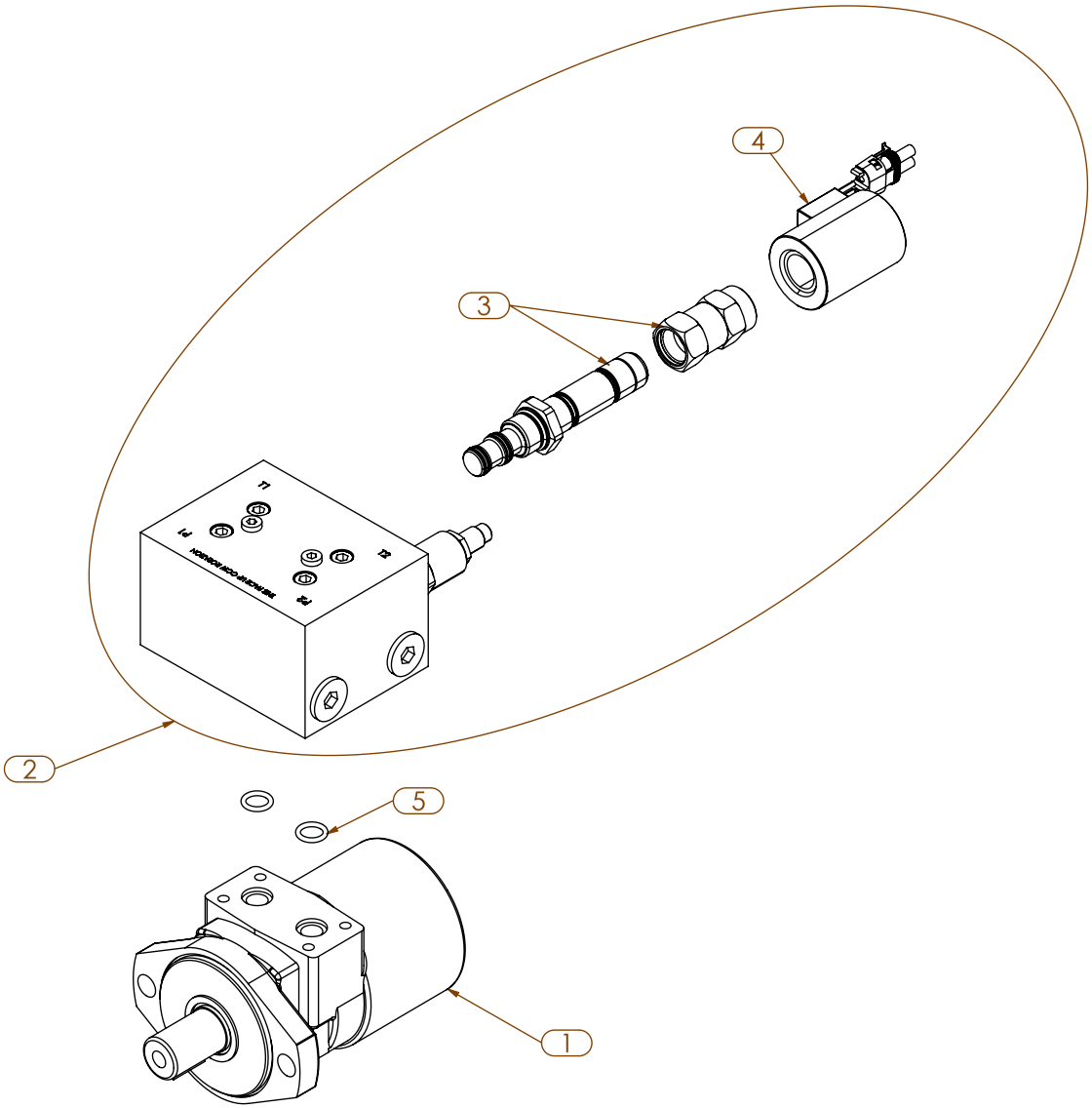
4
3
2
5
1

ITEM	PART NUMBER	DESCRIPTION
1	INT1931	MOTOR, HYD, 5.0 CUBIC INCH
2	INT1932	HYDRAULIC DRIVE, VALVE BLOCK ASM
3	300422	VALVE, PROPORTIONAL
4	300421	SOLENOID COIL
5	300688	O-RING, 3/32 -112

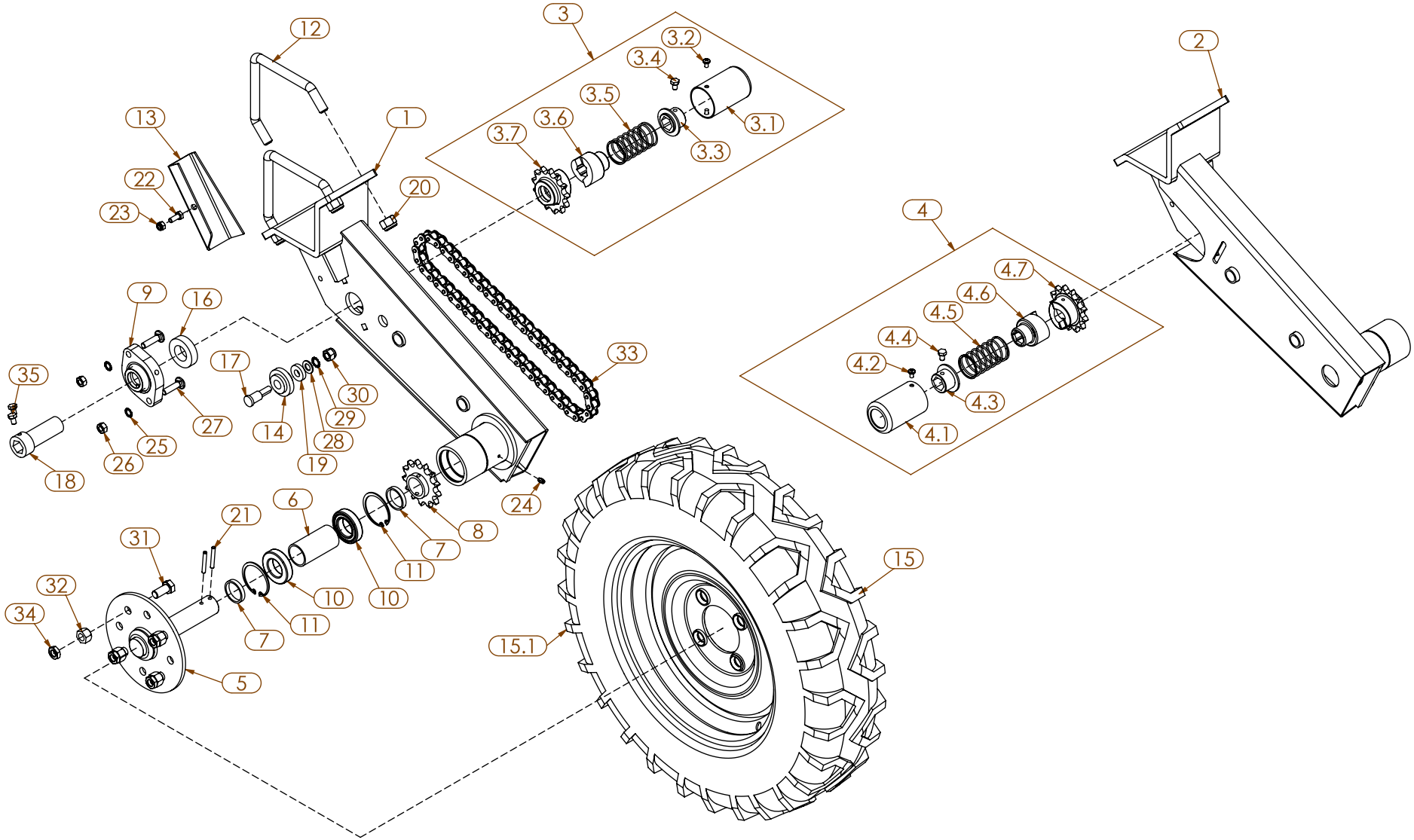
12
3
3.2
3.4
3.5
3.6
3.7
3.1
3.3
2
13
1
22
20
23
4
4.7
4.6
4.5
4.4
4.2
4.3
4.1
9
16
33
35
17
30
29
28
27
14
25
26
19
18
24
6
21
8
7
11
31
10
10
32
34
11
7
15
15.1
5

ITEM	PART NUMBER	DESCRIPTION
1	4505.1D	WHEEL HOUSING L
2	4505.2D	WHEEL HOUSING R
3	4467.G	HEX SHAFT SLIP CLUTCH LH
3.1	4313	SLIP CLUTCH PROTECTION TUBE
3.2	10530090	SCREW, PHILLIPS, 6 X 10
3.3	4312.A	BUSHING & SPRING STOP
3.4	HM-2812	HEX, BOLT, 8 X 12 G8.8
3.5	4311	SPRING. SLIP CLUTCH
3.6	4310.1A	CLAW, SLIPCLUTCH, LH
3.7	4309.1B	SPROCKET, 13T, LH
4	4467.D	HEX SHAFT SLIP CLUTCH RH
4.1	4313	SLIP CLUTCH PROTECTION TUBE
4.2	10530090	SCREW, PHILLIPS, 6 X 10
4.3	4312.A	BUSHING & SPRING STOP
4.4	HM-2812	HEX, BOLT, 8 X 12 G8.8
4.5	4311	SPRING. SLIP CLUTCH
4.6	4310.2A	CLAW, SLIPCLUTCH, RH
4.7	4309.2B	SPROCKET, 13T, RH
5	4308	HUB DRIVE WHEEL
6	4526	INSIDE SPACER
7	4527	OUTSIDE SPACER
8	4306.A	SPROCKET, 13T
9	4514	PILLOW BLOCK w/ BEARING
10	4525	BEARING (60072RS)
11	4661	SNAP RING, INTERNAL, 62MM
12	4501	V-BOLT, 5X5, M16
13	4518.1	FRONT GUARD L
14	4319	IDLER
15	900015.1	WHEEL w/ RIM, 5.90 X 15 TIRE
15.1	G170106152	TIRE, 5.90 x 15 STANDARD
16	4529	BUSHING, 30 X 35 X 14.25
17	4320	BOLT, CHAIN TENSIONER, 12MM
18	4528	CLUTCH SLEEVE

ITEM	PART NUMBER	DESCRIPTION
19	10621056	WASHER, 30 X 13 X 6 MM
20	NM-51605	NUT, NYLOCK, 16mm, G8.8
21	10172094	ROLL PIN, 6 X 45mm
22	HM-2820	HEX, BOLT, 8 X 20, G8.8
23	NM-1812	NUT, NYLOCK, 8mm, G8.8
24	10118	GREASE ZERK, 6mm
25	10629011	WASHER, ET LOCK, 10mm
26	NM-21011	NUT, HEX, 10mm, G8.8
27	CBM-31040	CARR. BOLT, 10 X 40mm, CL8.8
28	10621032	WASHER, FLAT, 13 X 24 X 2
29	10629013	WASHER, ET LOCK, 12mm
30	NM-31205	NUT, NYLOCK, 12mm, G8.8
31	HM-71430	HEX, BOLT, 14 X 30, G8.8
32	1277.3	LUG NUT, 14 MM
33	4307.B	CHAIN, 13N, 52P W/CONN
34	NM-41210	NUT, HEX, JAM, 14mm, G8.8
35	HM-2812	HEX, BOLT, 8 X 12 G8.8

5X5 DRIVE WHEEL BLOCK, ADJUSTABLE

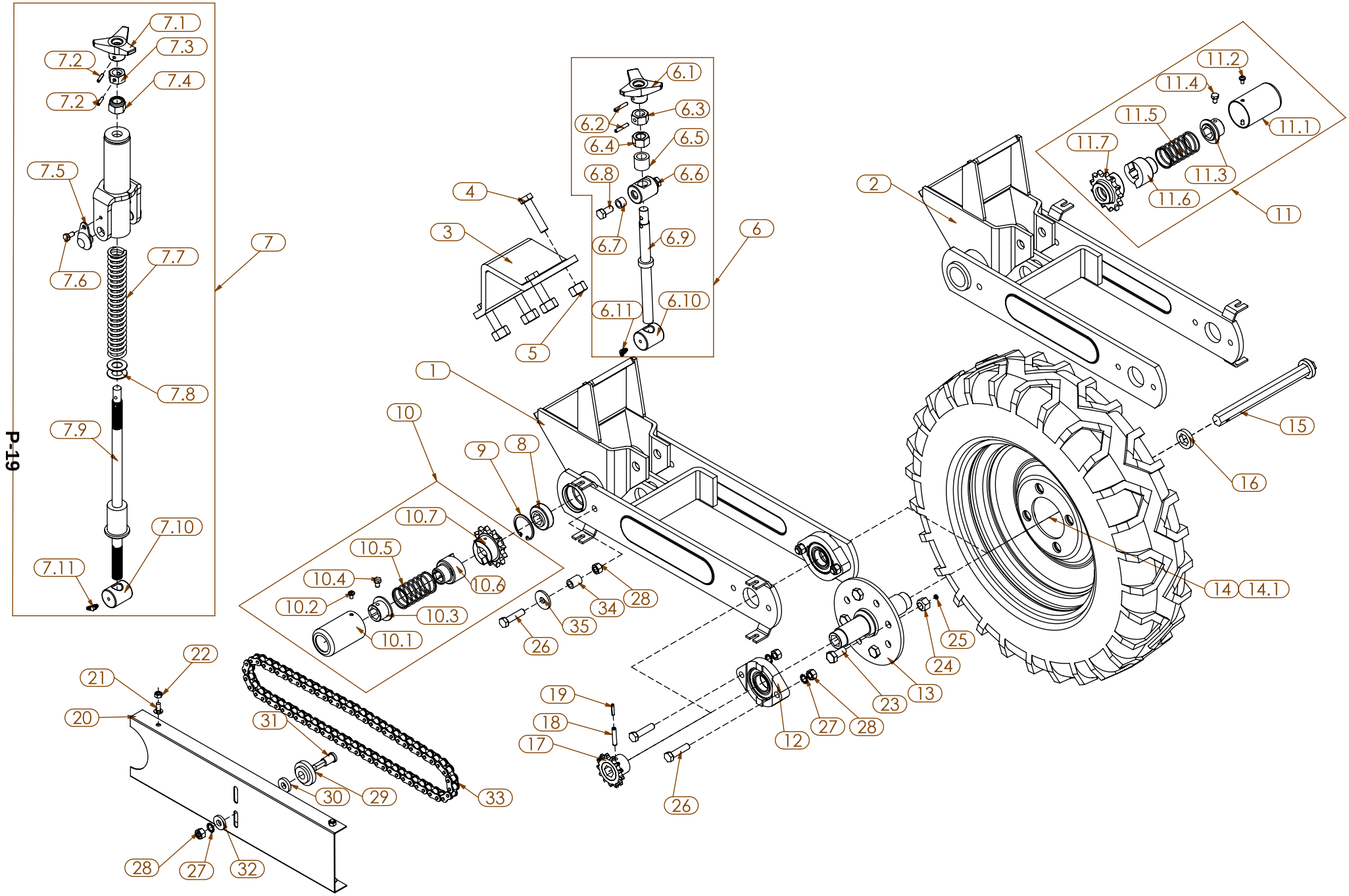

ITEM	PART NUMBER	DESCRIPTION
1	4710.2B	5X5, ADJUSTABLE WHL BLCK, RH
2	4710.1B	5X5, ADJUSTABLE WHL BLCK, LH
3	1534.A	CLAMP, 5 X 5
4	HM-81670	HEX, BOLT, 16 X 70, G8.8
5	NM-72001	NUT, HEX, 20mm, G8.8
6	653611	ADJUSTMENT SCREW ASSY
6.1	7083	KNOB
6.2	10172092	ROLL PIN, 6X35
6.3	4728	HEX NUT, 20MM W/6MM HOLE
6.4	NM-72001	NUT, HEX, 20mm, G8.8
6.5	4711	SPACER BUSHING
6.6	4717	PIVOT PIN
6.7	20019052	BUSHING, 12 ID X 18.5 OD X 13 L
6.8	HM-61225	HEX, BOLT, 12 X 25, G8.8
6.9	4714	ADJUSTING THREADED ROD
6.10	4715	PIVOT PIN
6.11	10118.A	GREASE ZERK, 45°, 6MM
7	650610	SCREW ADJUSTMENT, SPRING LOADED
7.1	7083	KNOB
7.2	301090	ROLL PIN, 5 X 24MM
7.3	4728	HEX NUT, 20MM W/6MM HOLE
7.4	NM-72005	NUT, NYLOCK, 20mm, G8.8
7.5	66005779	PIN, TRUNNION
7.6	HM-2816	HEX, BOLT, 8 X 16, G8.8
7.7	5666.2	SPRING
7.8	10623028	WASHER, 21 X 40 X 2 MM
7.9	4726	THREADED ROD, SPRING LOADED
7.10	4715	PIVOT PIN
7.11	10118.A	GREASE ZERK, 45°, 6MM
8	4659	BEARING, (205KRR2)
9	4660	SNAP RING, INTERNAL, 52MM
10	4467.D	HEX SHAFT SLIP CLUTCH RH
10.1	4313	SLIP CLUTCH PROTECTION TUBE
10.2	10530090	SCREW, PHILLIPS, 6 X 10
10.3	4312.A	BUSHING & SPRING STOP
10.4	HM-2812	HEX, BOLT, 8 X 12 G8.8

ITEM	PART NUMBER	DESCRIPTION
10.5	4311	SPRING. SLIP CLUTCH
10.6	4310.2A	CLAW, SLIPCLUTCH, RH
10.7	4309.2B	SPROCKET, 13T, RH
11	4467.G	HEX SHAFT SLIP CLUTCH LH
11.1	4313	SLIP CLUTCH PROTECTION TUBE
11.2	10530090	SCREW, PHILLIPS, 6 X 10
11.3	4312.A	BUSHING & SPRING STOP
11.4	HM-2812	HEX, BOLT, 8 X 12 G8.8
11.5	4311	SPRING. SLIP CLUTCH
11.6	4310.1A	CLAW, SLIPCLUTCH, LH
11.7	4309.1B	SPROCKET, 13T, LH
12	4655	BEARING AND FLANGE
13	4653	HUB
14	900015.1	WHEEL w/ RIM, 5.90 X 15 TIRE
14.1	G170106152	TIRE, 5.90 x 15 STANDARD
15	4654	SPINDLE, HEX
16	4716	SPACER
17	4656.A	SPROCKET, HEX BORE, 13T
18	10173020	ROLL PIN, 8 X 40
19	301090	ROLL PIN, 5 X 24MM
20	4658.A	ADJUSTABLE DRIVE WHEEL SHIELD
21	10561053	CARRIAGE BOLT, 8 X 18MM
22	NM-1801	NUT, HEX, 8mm, G8.8
23	1277	BOLT, HEX 14 X 30 MM
24	1277.3	LUG NUT, 14 MM
25	NM-0501	NUT, HEX, JAM, 5mm, G8.8
26	HM-61250	HEX, BOLT, 12 X 50, G10.9
27	10629013	WASHER, ET LOCK, 12mm
28	NM-31201	NUT, HEX, 12mm, G8.8
29	4319	IDLER
30	10621056	WASHER, FLAT, 13 X 30 X 6
31	4320	BOLT, CHAIN TENSIONER, 12MM
32	10621055	WASHER, FLAT, 13 X 30 X 5
33	4657.A	CHAIN, 12BR/#60, 66P, W/ CL
34	9658	BUSHING, 12 ID X 18 OD X 25 L
35	10621061	WASHER, FLAT, 13 X 40 X 4

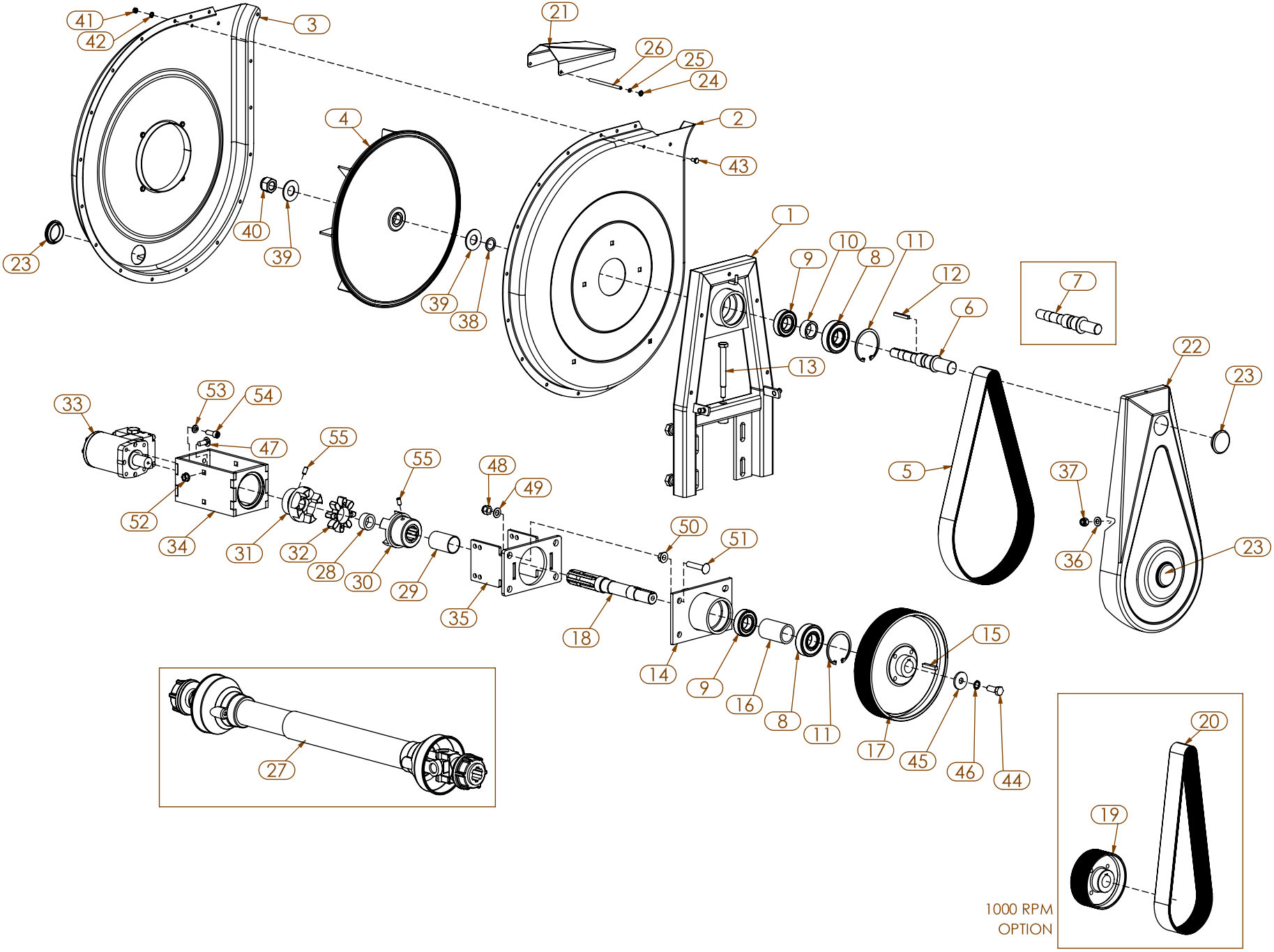
41
42
3
21
26
25
24
4
2
43
40
39
23
39
38
1
9
10
8
11
12
7
6
13
22
23
33
53
54
47
55
55
48
49
5
37
52
34
31
32
28
30
29
35
50
51
36
23
18
14
9
16
8
11
15
17
45
46
44
27
20
19
1000 RPM
OPTION

ITEM	PART NUMBER	DESCRIPTION
1	4400.1	SUPPORT FRAME
2	4401.B	FAN HOUSING, (SUPPORT FRAME SIDE)
3	4402.B	FAN HOUSING MANIFOLD SIDE
4	4403.B	FAN BLADE, PLASTIC (16 1/8" DIA.)
5	4413	BELT, STD TURBO 450 & 540 RPM
6	4452	UPPER SHAFT, 540 & 1000 RPM (1 1/8" DIA.)
7	4452.1	UPPER SHAFT 450 RPM (7/8" DIA.)
8	4408	BEARING 72mm
9	4407	BEARING 62mm
10	4410.A	SPACER BUSHING
11	4409	SNAPRING, INTERNAL (72mm)
12	4439.A	KEY FOR UPPER SHAFT (6X6X45mm)
13	4440	BOLT, BELT TENSION ADJUSTMENT
14	4404	SHAFT HOUSING
15	4437	KEY, 8 X 7 X 40mm)
16	4411	SPACER BUSHING (LOWER SHAFT)
17	4412.2	PULLEY, 450 & 540 RPM
18	4405.A	LOWER SHAFT(W/1 3/8" 6 SPLINE ADAPTER)
19	4412.3	LOWER PULLEY, 1000 RPM 25 GROOVES (150mm)
20	4413.1	BELT, STD TURBO 1000 RPM
21	4429.A	OUTLET SHIELD
22	4414.1	COVER SHIELD
23	300571	PLUG, MINI HOPPER
24	6090	STOP SNAP RING, 6mm
25	6089	RUBBER RING
26	4455	TURBOFAN VALVE PIN
27	4428.B	PTO SHAFT, 540 RPM, 24"
28	800436	SPIDER RING
29	5039	COUPLING SPACER, 61MM LONG
30	5040	COUPLING, TURBOFAN END, 6 SPLINE
31	5042	COUPLING, MOTOR SIDE, 1" KEYED
32	5041	ELASTIC SHOCK ABSORBER
33	FTA0232-1	STD TURBO MOTOR
34	200161	BRACKET WA WITH MACHINING
35	200266	MOTOR MOUNT END WA

ITEM	PART NUMBER	DESCRIPTION
36	10620089	WASHER, FLAT, 10.5 X 20 X 2
37	NM-21015	NUT, NYLOCK, 10mm, G8.8
38	10623043	WASHER, FLAT, 22.5 X 48 X 4
39	10623042	WASHER, FLAT, 22.5 X 48 X 3
40	NM-72005	NUT, NYLOCK, 20mm, G8.8
41	NM-0601	NUT, HEX, 6mm, G8.8
42	10629007	WASHER, ET LOCK, 6mm
43	HM-0612	HEX, BOLT, 6 X 12, G8.8
44	HM-61230	HEX, BOLT, 12 X 30, G8.8
45	10621061	WASHER, FLAT, 13 X 40 X 4
46	10629013	WASHER, ET LOCK, 12mm
47	CB-2210	BOLT, CARR., 3/8"-16 X 1", G5
48	N-3101	NUT, NYLOCK 7/16"-14 G5
49	W-3410	WASHER, FLAT, 7/16"SAE G8
50	N-3103	NUT, SER. FLANGE, 7/16"-14
51	CB-3323	BOLT, CARR., 7/16"-14 X 2.25, G5
52	N-2301	NUT, SER. FLANGE, 3/8"-16
53	W-2610	WASHER, SPLIT, 3/8", G8
54	F23305	SCREW, SHC, 3/8"-16 X 1
55	10591915	SET SCREW, SH, 8 X 16

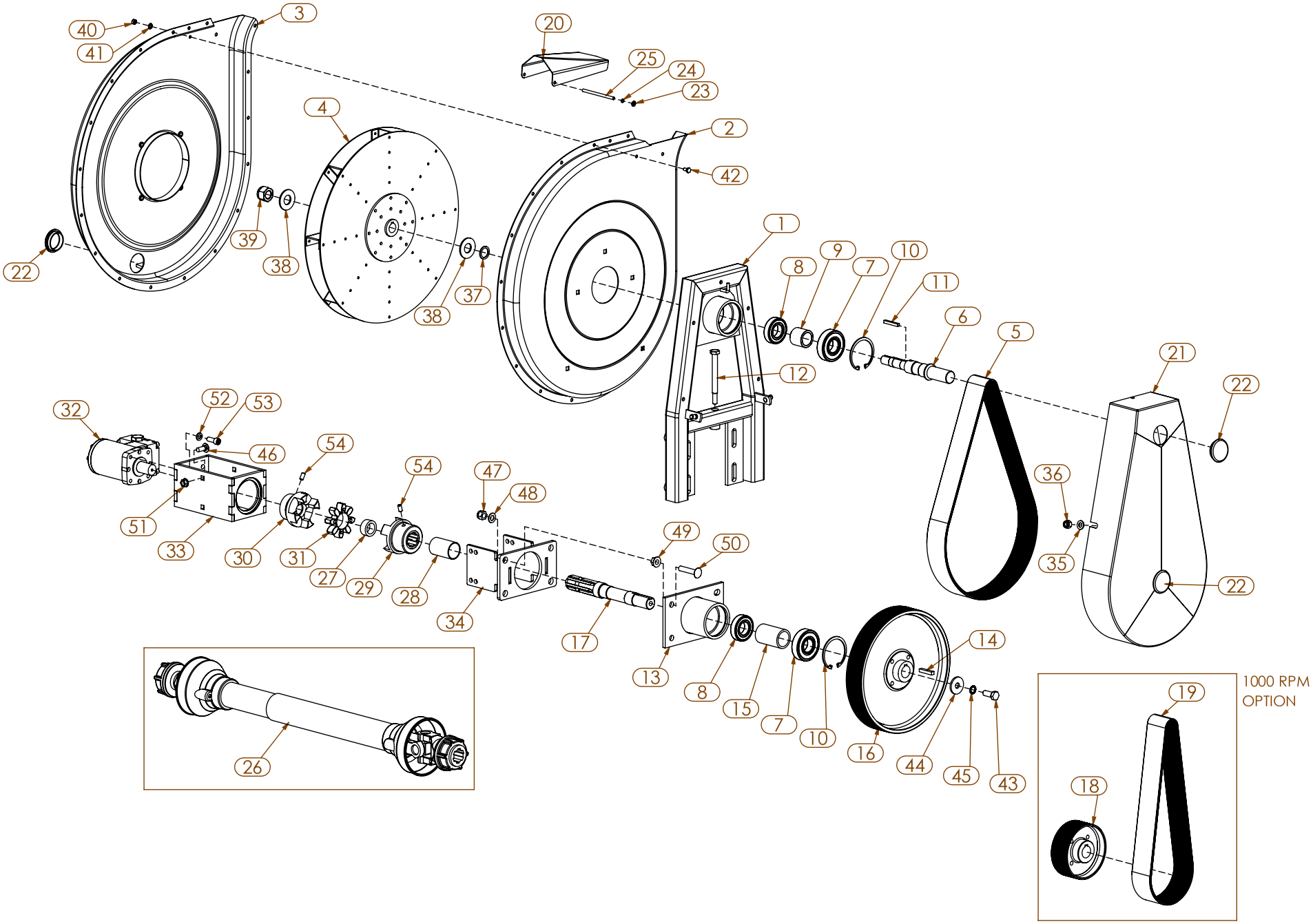
1000 RPM
OPTION

ITEM	PART NUMBER	DESCRIPTION
1	4400.1A	SUPPORT FRAME
2	4401.B	FAN HOUSING, (SUPPORT FRAME SIDE)
3	4402.C	FAN HOUSING, (MANIFOLD SIDE)
4	4403.D	FAN BLADE (ALUMINUM, 17 3/4" DIA)
5	4413.B	BELT, 500 RPM 25 GROOVES (1244J25)
6	4452.B	UPPER SHAFT (1 1/8" DIA PULLEY)
7	4408	BEARING 72mm
8	4407	BEARING 62mm
9	4410	SPACER, UPPER SHAFT, HI OUTPUT
10	4409	SNAPRING, INTERNAL (72mm)
11	4439.A	KEY FOR UPPER SHAFT (6X6X45mm)
12	4440	BOLT, BELT TENSION ADJUSTMENT
13	4404.A	SHAFT HOUSING (LOWER DRIVE SHAFT)
14	4437	KEY, 8 X 7 X 40mm)
15	4411	SPACER BUSHING (LOWER SHAFT)
16	4412.B	LOWER PULLEY, 540/500 RPM 25 GROOVES, (290mm)
17	4405.A	LOWER SHAFT(W/1 3/8" 6 SPLINE ADAPTER)
18	4412.1B	LOWER PULLEY, 1000 RPM 25 GROOVES (150mm)
19	4413.1B	BELT, 1000 RPM 25 GROOVES (991J25)
20	4429.A	OUTLET SHIELD
21	4414.3	COVER SHIELD, HO FAN
22	300571	PLUG, MINI HOPPER
23	6090	STOP SNAP RING, 6mm
24	6089	RUBBER RING
25	4455	TURBOFAN VALVE PIN
26	4428.B	PTO SHAFT, 540 RPM, 24"
27	800436	SPIDER RING
28	5039	COUPLING SPACER, 61MM LONG
29	5040	COUPLING, TURBOFAN END, 6 SPLINE
30	5042	COUPLING, MOTOR SIDE, 1" KEYED
31	5041	ELASTIC SHOCK ABSORBER
32	FTA0425	TURBO MOTOR W BLOCK - 4.5 CI
33	200161	BRACKET WA WITH MACHINING
34	200266	MOTOR MOUNT END WA

ITEM	PART NUMBER	DESCRIPTION
35	10620089	WASHER, FLAT, 10.5 X 20 X 2
36	NM-21015	NUT, NYLOCK, 10mm, G8.8
37	10623043	WASHER, FLAT, 22.5 X 48 X 4
38	10623042	WASHER, FLAT, 22.5 X 48 X 3
39	NM-72005	NUT, NYLOCK, 20mm, G8.8
40	NM-0601	NUT, HEX, 6mm, G8.8
41	10629007	WASHER, ET LOCK, 6mm
42	HM-0612	HEX, BOLT, 6 X 12, G8.8
43	HM-61230	HEX, BOLT, 12 X 30, G8.8
44	10621061	WASHER, FLAT, 13 X 40 X 4
45	10629013	WASHER, ET LOCK, 12mm
46	CB-2210	BOLT, CARR., 3/8"-16 X 1", G5
47	N-3101	NUT, NYLOCK 7/16"-14 G5
48	W-3410	WASHER, FLAT, 7/16"SAE G8
49	N-3103	NUT, SER. FLANGE, 7/16"-14
50	CB-3323	BOLT, CARR., 7/16"-14 X 2.25, G5
51	N-2301	NUT, SER. FLANGE, 3/8"-16
52	W-2610	WASHER, SPLIT, 3/8", G8
53	F23305	SCREW, SHC, 3/8"-16 X 1
54	10591915	SET SCREW, SH, 8 X 16

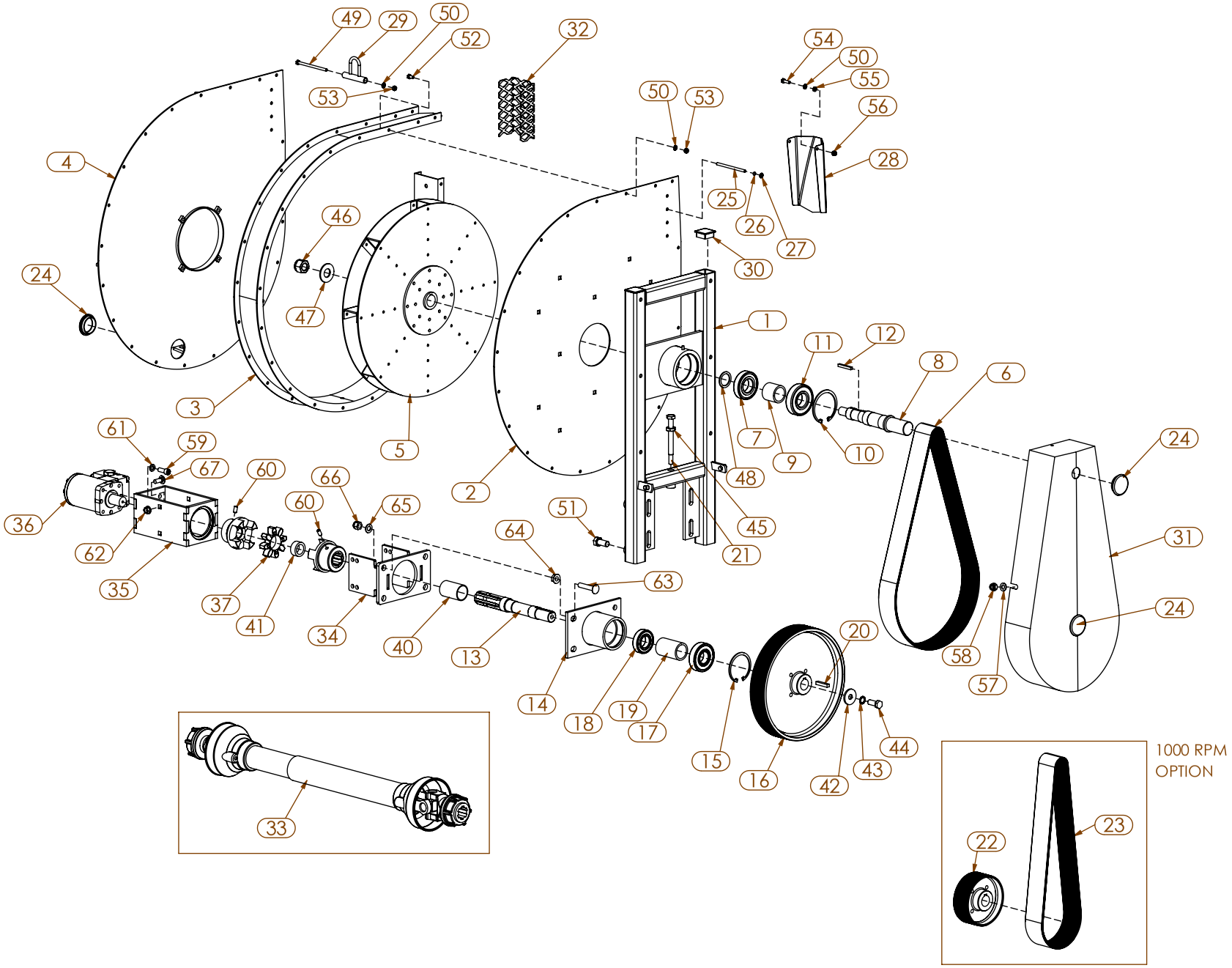
1000 RPM
OPTION

ITEM	PART NUMBER	DESCRIPTION
1	4240	SUPPORT FRAME
2	4241	FAN HOUSING (SUPPORT FRAME SIDE)
3	4243	FAN HOUSING SIDEWALL
4	4242	FAN HOUSING (MANIFOLD SIDE)
5	4244.CO	FAN BLADE, ALUMINUM 19 5/8" DIA.
6	4249.2	BELT, 540 RPM 25 GROOVES (1335J25)
7	4251	BEARING UPPER SHAFT (62072RS1)
8	4248.1	UPPER SHAFT, 25 GROOVES (35mm O.D.)
9	4247	SPACER BUSHING (UPPER SHAFT)
10	4246	SNAPRING, INTERNAL (80mm)
11	4252	BEARING UPPER SHAFT (63072RS1)
12	4439.A	KEY FOR UPPER SHAFT (6X6X45mm)
13	4405.A	LOWER SHAFT(W/1 3/8" 6 SPLINE ADAPTER)
14	4404.A	SHAFT HOUSING (LOWER DRIVE SHAFT)
15	4409	SNAPRING, INTERNAL (72mm)
16	4412.B	LOWER PULLEY, 540/500 RPM 25 GROOVES, (290mm)
17	4408	BEARING 72mm
18	4407	BEARING 62mm
19	4411	SPACER BUSHING (LOWER SHAFT)
20	4437	KEY, 8 X 7 X 40mm)
21	4440	BOLT, BELT TENSION ADJUSTMENT
22	4412.1B	LOWER PULLEY, 1000 RPM 25 GROOVES (150mm)
23	4249.3	BELT, 1000 RPM 25 GROOVES
24	300571	PLUG, MINI HOPPER
25	4455	TURBOFAN VALVE PIN
26	6089	RUBBER RING
27	6090	STOP SNAP RING, 6mm
28	4429.A	OUTLET SHIELD
29	4253	SUPPORT EYE
30	9525	END CAP
31	4250	COVER SHIELD, XHO TURBO FAN
32	4254	SCREEN
33	4428.B	PTO SHAFT, 540 RPM, 24"
34	200266	MOTOR MOUNT END WA
35	200161	BRACKET WA WITH MACHINING
36	FTA0425	TURBO MOTOR W BLOCK - 4.5 CI

ITEM	PART NUMBER	DESCRIPTION
37	5041	ELASTIC SHOCK ABSORBER
38	5042	COUPLING, MOTOR SIDE, 1" KEYED
39	5040	COUPLING, TURBOFAN END, 6 SPLINE
40	5039	COUPLING SPACER, 61MM LONG
41	800436	SPIDER RING
42	10621061	WASHER, FLAT, 13 X 40 X 4
43	10629013	WASHER, ET LOCK, 12mm
44	HM-61230	HEX, BOLT, 12 X 30, G8.8
45	NM-41210	NUT, HEX, JAM, 14mm, G8.8
46	NM-72005	NUT, NYLOCK, 20mm, G8.8
47	10623042	WASHER, FLAT, 22.5 X 48 X 3
48	10624016	WASHER, FLAT, 31 X 41 X 2
49	HM-16100	HEX, BOLT, 6 X 100, G10.9
50	10629007	WASHER, ET LOCK, 6mm
51	HM-71430	HEX, BOLT, 14 X 30, G8.8
52	HM-0612	HEX, BOLT, 6 X 12, G8.8
53	NM-0601	NUT, HEX, 6mm, G8.8
54	HM-0620	HEX, BOLT, 6 X 20, G8.8
55	NM-0610	NUT, HEX, JAM, 6mm, G8.8
56	NM-0605	NUT, NYLOCK, 6mm, G8.8
57	10620089	WASHER, FLAT, 10.5 X 20 X 2
58	NM-21015	NUT, NYLOCK, 10mm, G8.8
59	F23305	SCREW, SHC, 3/8"-16 X 1
60	10591915	SET SCREW, SH, 8 X 16
61	W-2610	WASHER, SPLIT, 3/8", G8
62	N-2301	NUT, SER. FLANGE, 3/8"-16
63	CB-3323	BOLT, CARR., 7/16"-14 X 2.25, G5
64	N-3103	NUT, SER. FLANGE, 7/16"-14
65	W-3410	WASHER, FLAT, 7/16"SAE G8
66	N-3101	NUT, NYLOCK 7/16"-14 G5
67	CB-2210	BOLT, CARR., 3/8"-16 X 1", G5

STANDARD TURBOFAN HYDRAULIC MOTOR
2.8 CUBIC INCH DISPLACEMENT

HIGH OUTPUT & EXTRA HIGH OUTPUT TURBOFAN HYDRAULIC MOTOR
4.5 CUBIC INCH DISPLACEMENT

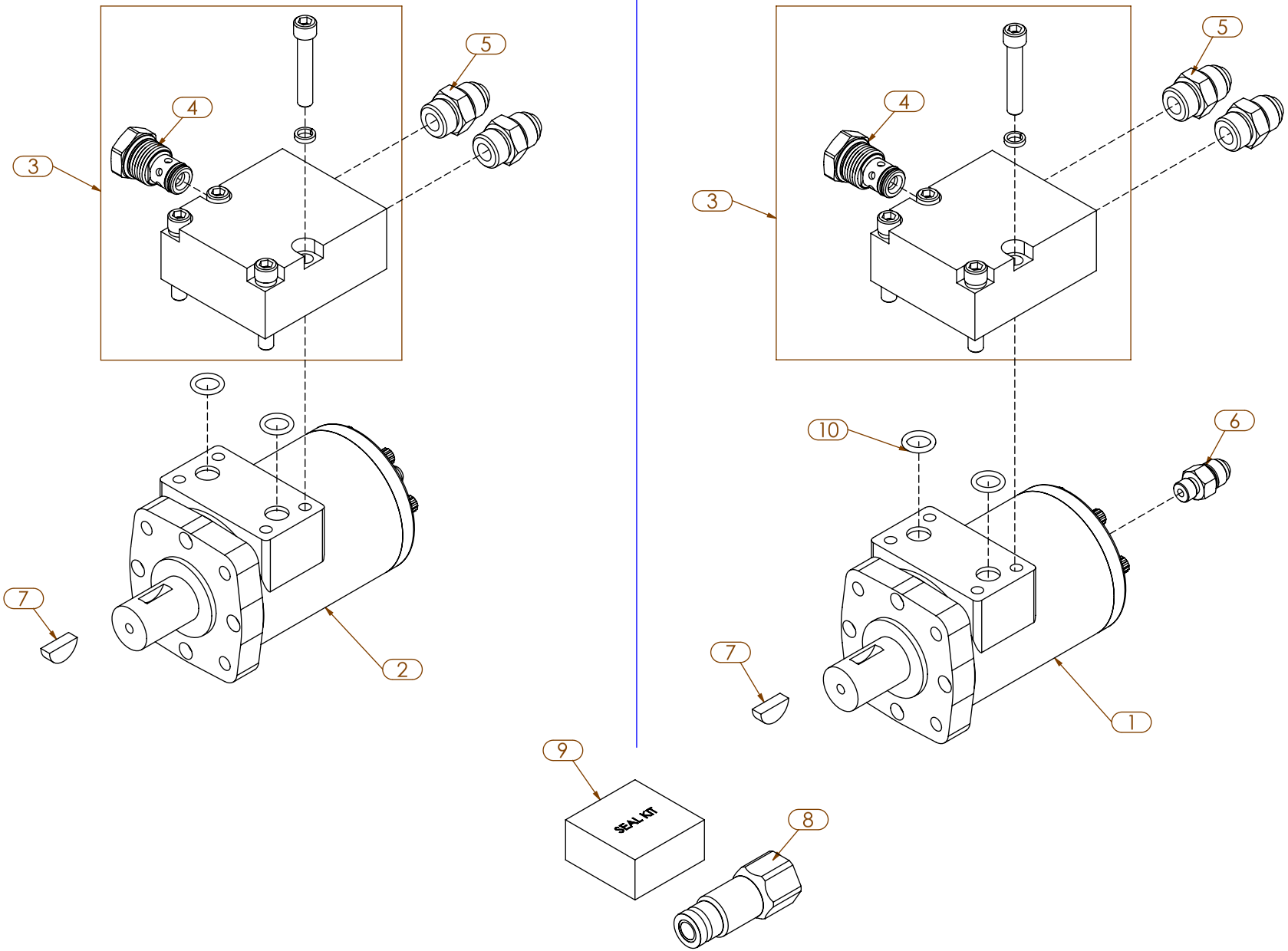

ITEM	PART NUMBER	DESCRIPTION
1	300982	HYD MOTOR W/ CASE DRAIN - 4.5 CI
2	300977	HYD MOTOR W/ CASE DRAIN- 2.8 CI
3	FP10270-2	BYPASS BLOCK W/ HARDWARE
4	900022	CHECK VALVE CARTRIDGE
5	TA6400-8-8	1/2 MALE JIC-1/2 MALE O-RING
6	TA6400-6-4	3/8 MALE JIC - 1/4 MALE O-RING
7	F14193	WOODRUFF KEY, 1/4" X 1"
8	301044	HYD QD - CASE DRAIN W/RELIEF
9	F60540	SEAL KIT, TURBOFAN MOTOR
10	300688	O-RING, 3/32 -112

VACUUM & PRESSURE GAUGES AND MOUNTS

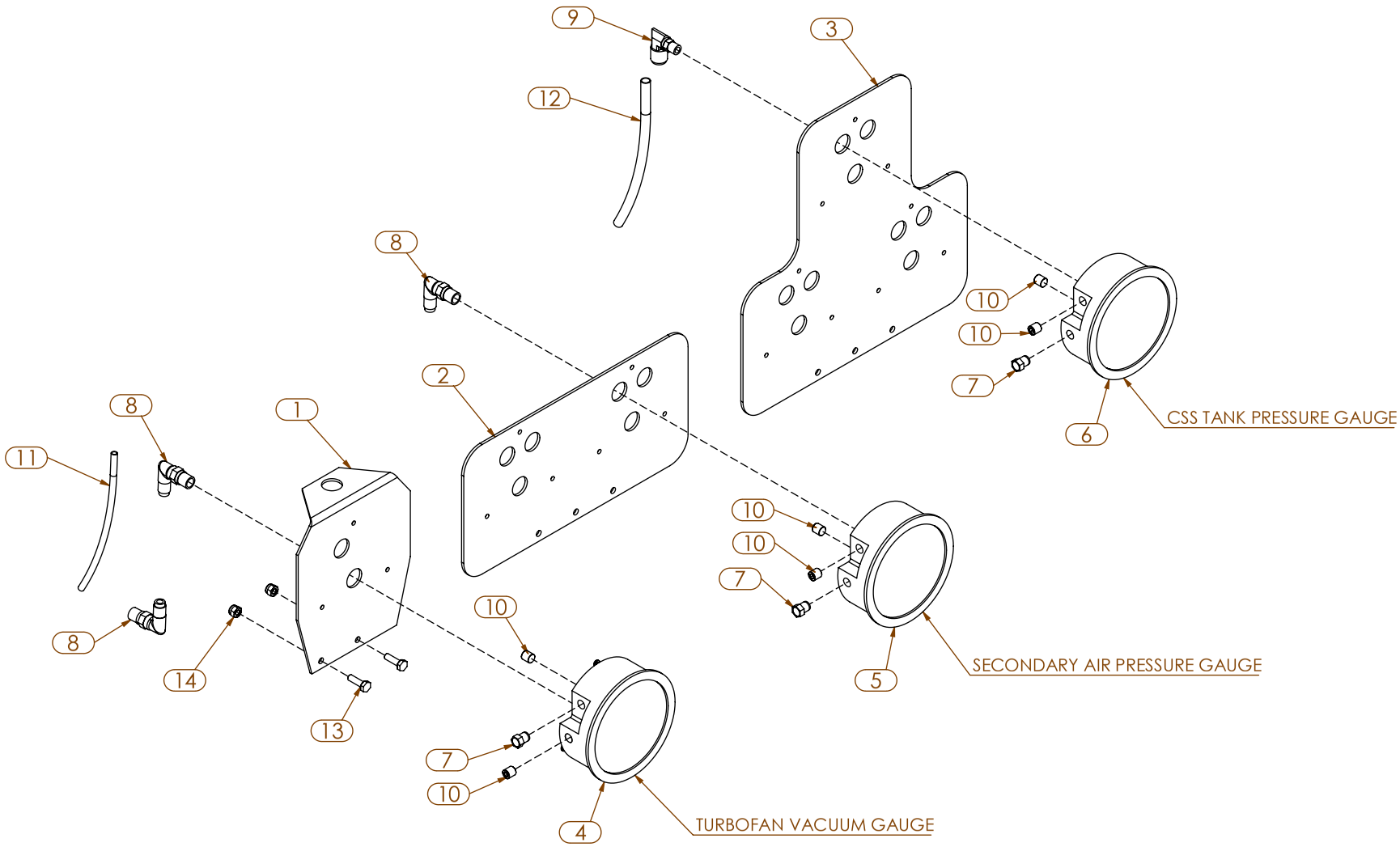

ITEM	PART NUMBER	DESCRIPTION
1	M30050070	MOUNTING BRACKET
2	800187	DOUBLE GAUGE PANEL
3	800148	TRIPLE GAUGE PANEL
4	D2040	VACUUM GAUGE
5	900389	PRESSURE GAUGE, 0-6 OZ/SQ IN.
6	301094	PRESSURE GAUGE, CSS 0-20 OZ/SQ. IN.
7	D200108-00	FILTER VENT PLUG
8	T279PP-4-2	1/4-1/8 POLYPUSH SWIVEL 90
9	T279PP-6-2	3/8-1/8 POLYPUSH SWIVEL 90
10	A-330	PLUG, 1/8" NPT
11	JPT04	TUBING 1/4"
12	JPT06	TUBING 3/8"
13	HM-0620	HEX, BOLT, 6 X 20, G8.8
14	NM-0605	NUT, NYLOCK, 6mm, G8.8

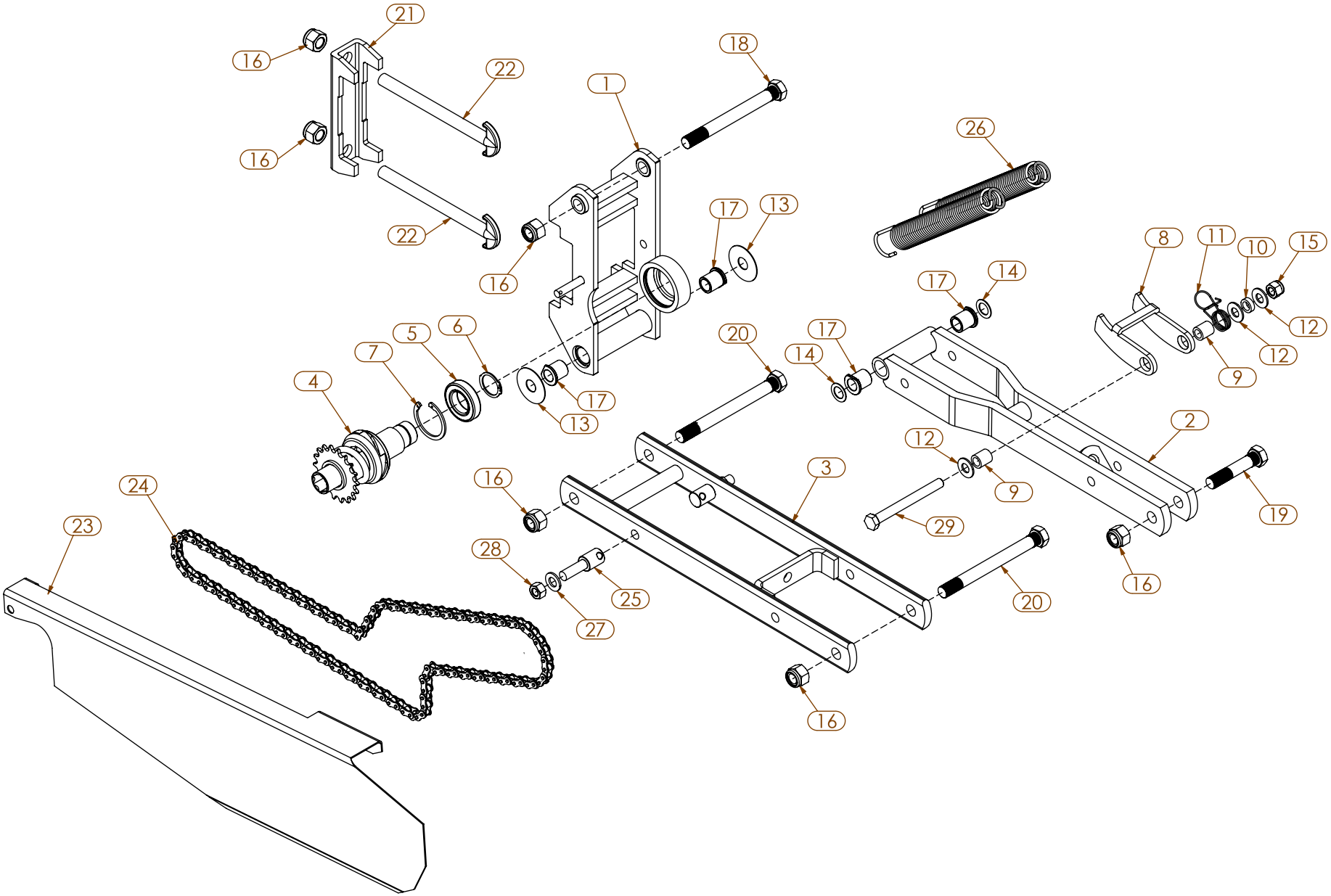
21
16
22
16
22
1
18
26
17
13
16
8
11
10
15
17
14
12
12
9
5
6
7
4
17
13
20
17
14
2
12
9
3
16
24
23
28
25
27
29
20
16
19
16

ITEM	PART NUMBER	DESCRIPTION
1	6967.3	CLAMP FACE WA, 5 X 5
2	643436	UPPER PARALLEL ARM
3	7098	LOWER LINKAGE ARM
4	6972.1	SLIP CLUTCH
5	11579	BEARING (60062RS)
6	6915	SNAP RING, 30mm
7	11580	SNAP RING, 55mm
8	20058672	UNIT LOCK BRACKET
9	7067	SPACER, 12 X 18 X 20
10	7108	SPACER
11	10153085	LOCKING SPRING
12	10621046	WASHER, FLAT, 13 X 27 X 2
13	10622052	WASHER, FLAT, 17 X 50 X 1
14	10622024	WASHER, FLAT, 16.5 X 26 X 1
15	NM-31205	NUT, NYLOCK, 12mm, G8.8
16	NM-51605	NUT, NYLOCK, 16mm, G8.8
17	5021.2	BUSHING
18	6965.C	PIVOT PIN, KNURL, 16-2 X 160mm
19	7099.C	PIVOT PIN, KNURL, 16-2 X 80mm
20	6963.C	PIVOT PIN, KNURL, 16-2 X 170mm
21	6969	5 X 5 CLAMP
22	6968.1	T-BOLT, M16-2 X 7.50
23	7090.A	CHAIN GUARD
24	300915	CHAIN, 5R, 124 PITCHES
25	30075131	LOWER ARM SPRING SUPPORT SHAFT NG+
26	6998	SPRING
27	W-4410	WASHER, FLAT, 1/2" SAE G8
28	NM-31201	NUT, HEX, 12mm, G8.8
29	HM-65120	HEX, BOLT, 12 X 120, G8.8

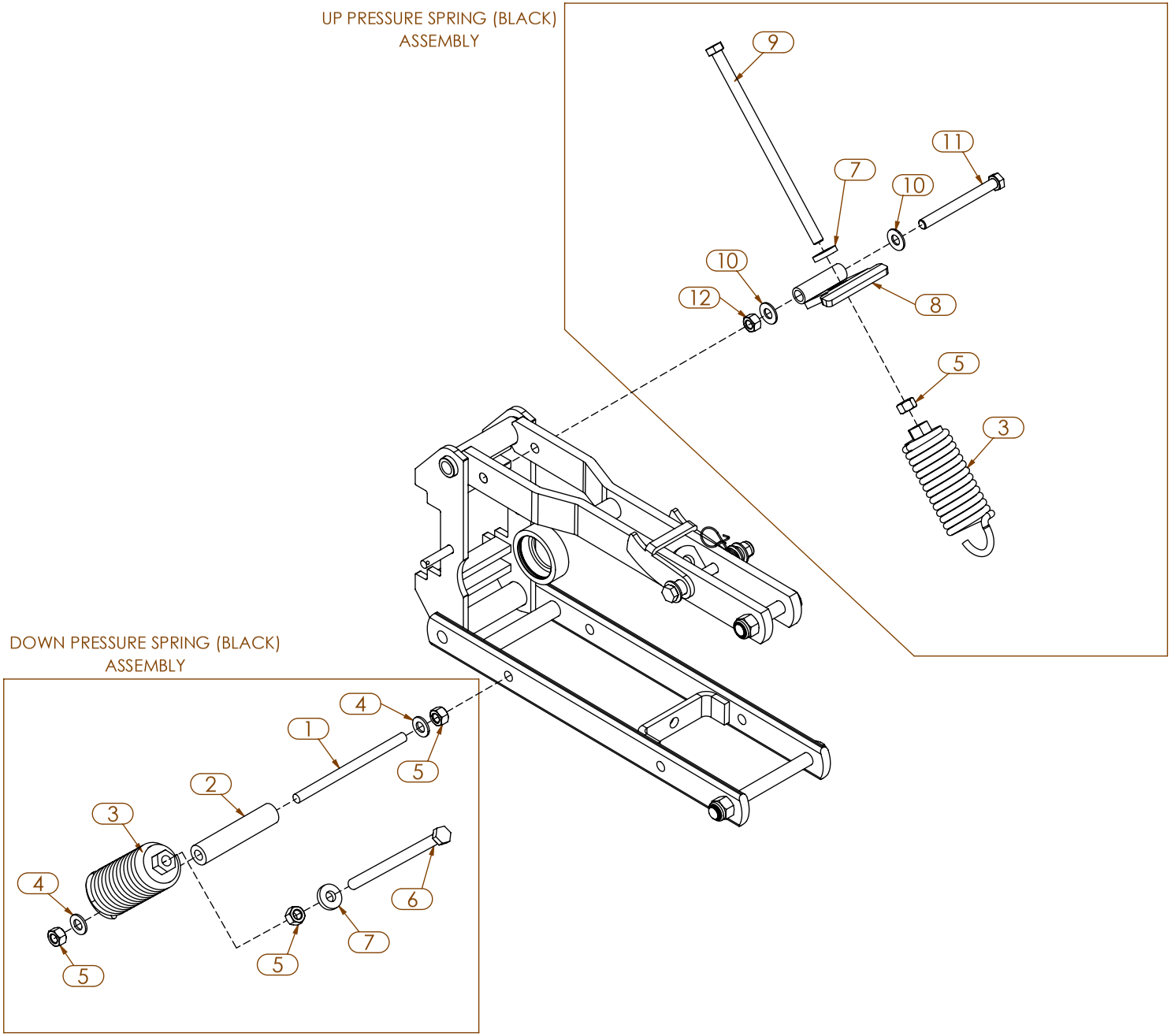
UP PRESSURE SPRING (BLACK)
ASSEMBLY
9
11
7
10
10
12
8
5
3
DOWN PRESSURE SPRING (BLACK)
ASSEMBLY
4
1
5
2
3
4
6
7
5
5

ITEM	PART NUMBER	DESCRIPTION
1	802393	THREADED ROD, 1/2"-13
2	900113	SPACER, 1.00 X
3	KA2068	HD SPRING
4	W-4410	WASHER, FLAT, 1/2" SAE G8
5	N-4001	NUT, HEX, 1/2"-13, G8
6	H-4805	BOLT, HEX, 1/2"-13 X 8", AT, G5
7	10621056	WASHER, FLAT, 13 X 30 X 6
8	200523	UP PRESSURE WA
9	H-4905	BOLT, HEX, 1/2"-13 X 10", AT, G5
10	10621046	WASHER, FLAT, 13 X 27 X 2
11	HM-65120	HEX, BOLT, 12 X 120, G8.8
12	NM-31201	NUT, HEX, 12mm, G8.8

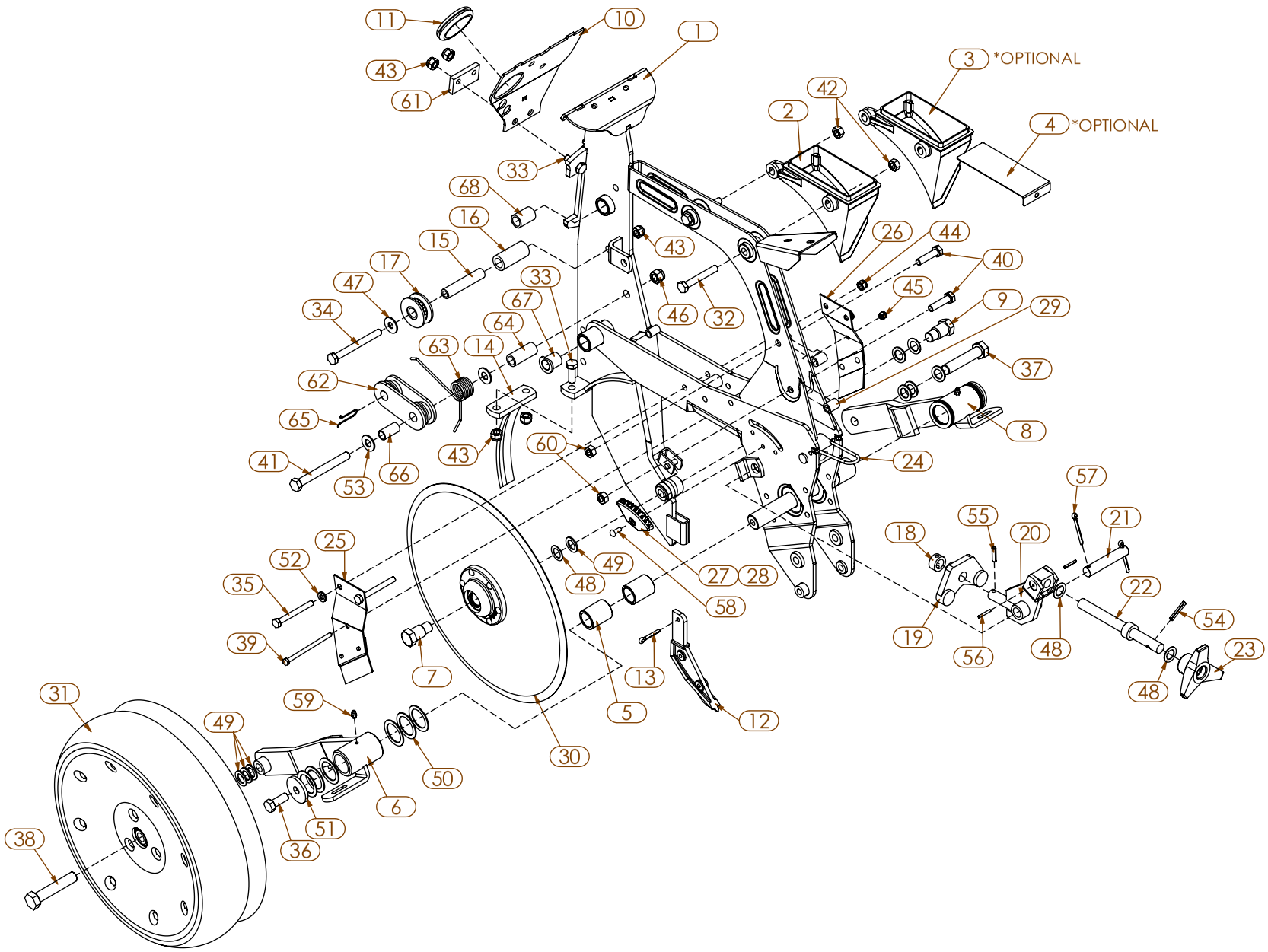
11
10
1
43
61
3 *OPTIONAL
42
2
4 *OPTIONAL
33
68
16
15
17
47
34
33
67
64
63
14
62
65
41
53
66
43
60
43
46
32
26
44
40
45
9
29
37
8
24
57
55
21
18
20
25
52
35
39
49
48
27
28
58
22
54
19
56
48
23
48
7
13
5
12
30
31
59
49
50
6
51
36
38

ITEM	PART NUMBER	DESCRIPTION
1	66005917	NG+4 UNIT FRAME
2	6202	COLLAR
3	6202.A	COLLAR W/ SLOT
4	6202.1	SHUT OFF SLIDE
5	7336	BUSHING, 2 PIECE, GAUGE WHL ARM
6	66006841	GAUGE WHEEL ARM L
7	7012.GA	SPINDLE, LT, 16mm, 1.5 PITCH
8	66006840	GAUGE WHEEL ARM R
9	7012.DA	SPINDLE, RT, 16mm, 1.5 PITCH
10	20059176	REMOVABLE FACEPLATE
11	10219093	RUBBER GROMMET, 2IN
12	7065	STANDARD INSERT
13	10170065	SPLIT PIN, 4 X 30 MM
14	7337	PROTECTION POINT
15	7095	ROLLER SHAFT
16	7094	SPACER
17	7096	ROLLER
18	6099	COLLAR, 25 X 16 X 12
19	7070	ROCKER ARM, GAUGE WHEEL
20	7069.C	BRACKET
21	7087.B	PIN
22	7076.A	DEPTH CONTROL ROD
23	7083	KNOB
24	7078	WIRE STOP
25	7084.2A	SCRAPER, L
26	7084.1A	SCRAPER, R
27	10040061	DEPTH GAUGE INDICATOR, LEFT
28	10040059	DEPGTH GAUGE INDICATOR, RIGHT
29	7105	BACK SPACER BUSHING
30	301197	OPENER DISK ASM
31	7073.N	GAUGE WHEEL ASM
32	HM-41070	HEX, BOLT, 10 X 70, G8.8
33	HM-41030	HEX, BOLT, 10 X 30, G8.8
34	HM-510100	HEX, BOLT, 10 X 100, G8.8
35	HM-2875	HEX, BOLT, 8 X 75, G8.8

ITEM	PART NUMBER	DESCRIPTION
36	HM-61230	HEX, BOLT, 12 X 30, G8.8
37	HM-81680	BOLT, HEX, RT, 16 X 80
38	7258.GA	BOLT, HEX, LT, 16 X 80
39	HM-16100	HEX, BOLT, 6 X 100, G10.9
40	HM-41040	HEX, BOLT, 10 X 40, G8.8
41	HM-65110	HEX, BOLT, 12 X 110, G8.8
42	NM-21011	NUT, HEX, 10mm, G8.8
43	NM-21015	NUT, NYLOCK, 10mm, G8.8
44	NM-1812	NUT, NYLOCK, 8mm, G8.8
45	NM-0605	NUT, NYLOCK, 6mm, G8.8
46	NM-31205	NUT, NYLOCK, 12mm, G8.8
47	10620095	WASHER, 10.5 X 27 X 2
48	10622024	WASHER, FLAT, 16.5 X 26 X 1
49	10622026	WASHER, FLAT, 16.5 X 26 X 2
50	10624040	WASHER, FLAT, 33 X 45 X 1.5
51	10621064	WASHER, FLAT, 13 X 45 X 5
52	10620063	WASHER, FLAT, 8.5 X 16 X 1.5
53	10621046	WASHER, FLAT, 13 X 27 X 2
54	10172092	ROLL PIN, 6 X 35mm
55	10172090	ROLL PIN, 6 X 25mm
56	10172031	ROLL PIN, 3.5 X 25mm
57	10170067	SPLIT PIN, 5 X 40mm
58	10176050	RIVET, 6 X 16mm
59	10118	GREASE ZERK, 6mm
60	NM-21011	NUT, HEX, 10mm, G8.8
61	7124.A	STOP
62	7154	IDLER
63	9174	SPRING
64	7228	SPACER
65	7227	SPRING
66	7229	BUSHING
67	5021	SELF LUBRICATING BUSHING
68	7100	BUSHING, 16 X 22 X 32

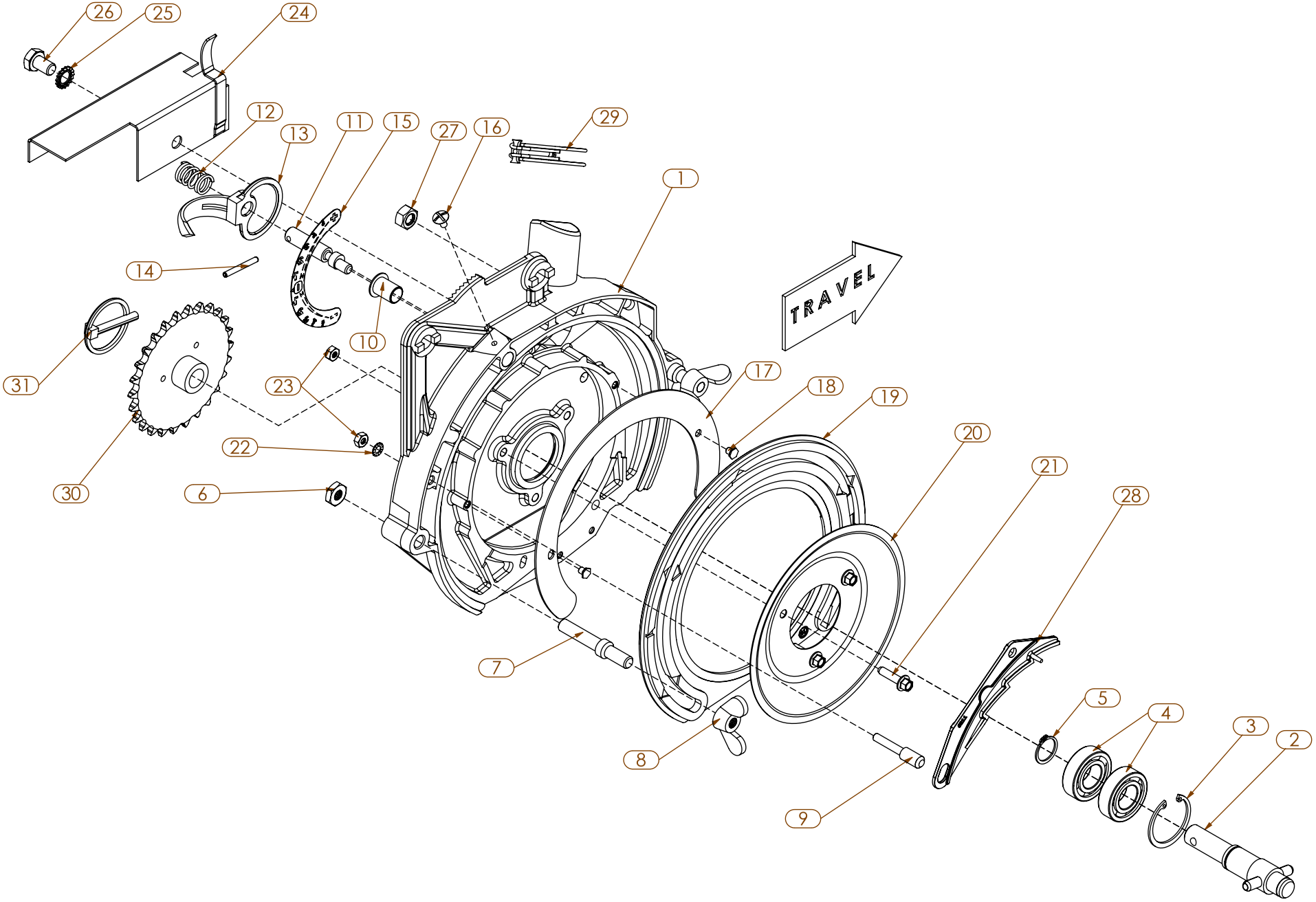
26
25
24
12
13
11
15
27
16
29
1
14
10
31
23
17
18
19
20
21
28
22
30
6
7
8
9
5
4
3
2
TRAVEL

ITEM	PART REF.	DESCRIPTION
1	20021564	METER BOX HOUSING
2	6207	NG UNIT SHAFT
3	4329.A	SNAP RING, INTERNAL, 27MM
4	6221	BEARING, METER SHAFT
5	6213	SNAP RING, EXTERNAL, 20MM
6	NM-21011	NUT, JAM, 10MM
7	6208	STUD, METER COVER
8	5692	WINGNUT, 10MM
9	6216	PIN, FIXED FOR SEED SINGULATOR
10	10200184	SLEEVE, SEED SINGULATOR
11	6217	CAM PIN, SEED SINGULATOR
12	6227	SPRING, SINGULATOR HANDLE
13	6228	LEVER, SEED SINGULATOR
14	10172043	ROLL PIN, 4 X 35
15	ST010	STICKER, SEED SINGULATOR SETTING NG+
16	10530060	SCREW, 5MM X 10MM
17	6209.A	BRACE
18	10072094	SCREW, 5MM X 6MM
19	6203.B	SEAL, PLASTIC
20	6206	TIGHTENING CAP
21	HM-0625	HEX BOLT METRIC FLANGE 6M X 25M G8.8
22	10629007	WASHER, EXTERNAL LOCK, 6mm
23	NM-0601	NUT, HEX, JAM 6mm
24	7089	GUARD, UNIT CHAIN
25	10629011	WASHER, EXTERNAL, 10mm
26	HM-41015	BOLT, HEX, 10 X 16
27	NM-21010	NUT, HEX, 10mm
28	6211	SINGULATOR
	6211.2A	SINGULATOR, LARGE SEED
29	300526	HOSE CLAMP
30	7115.S	SPROCKET, #41, 26T
31	6077	LYNCH PIN, 6MM

METER COVER NG+4

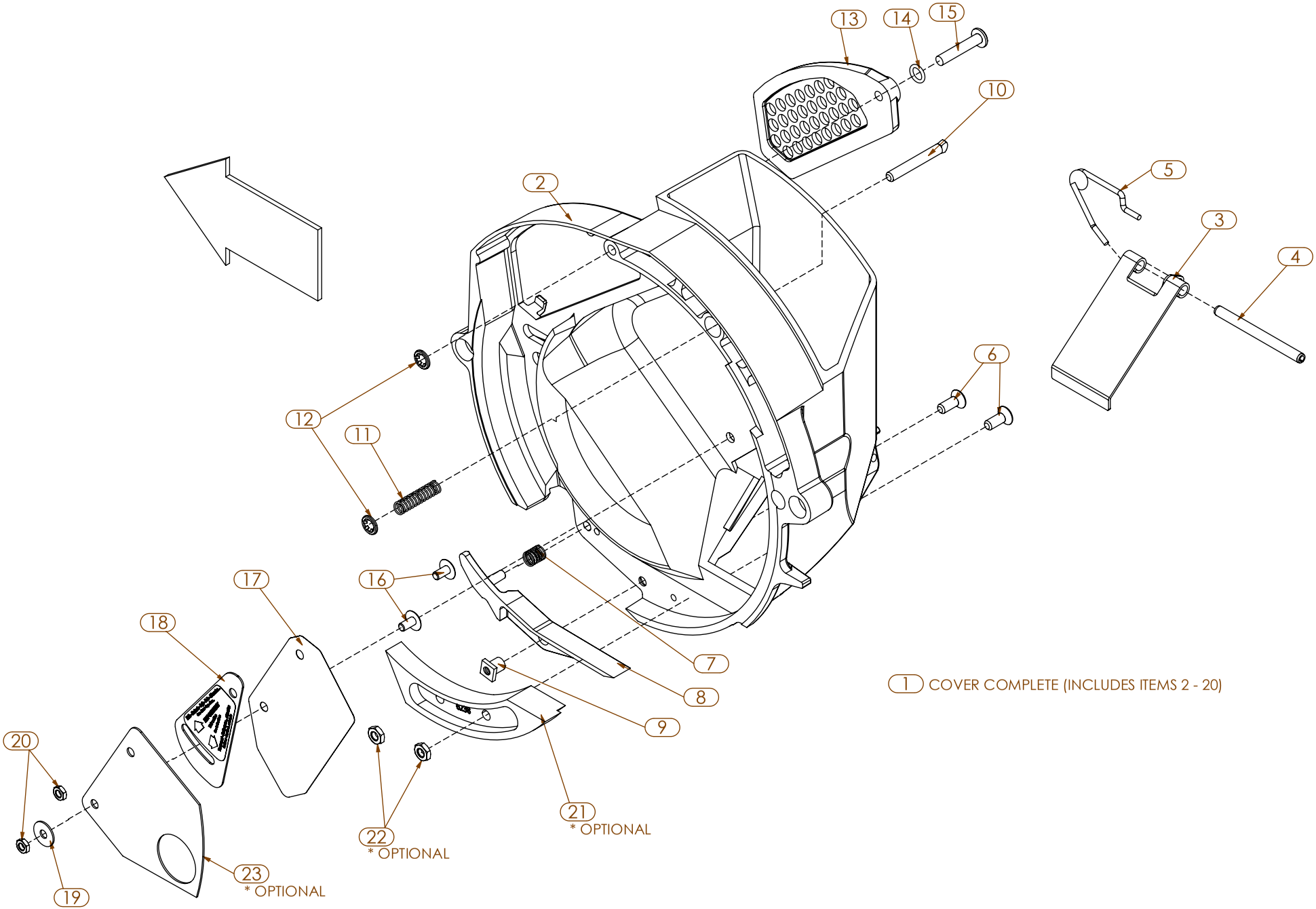

ITEM	PART REF.	DESCRIPTION
1	65012911	METER COVER COMPLETE, STD
	65012912	METER COVER COMPLETE, LARGE SEED
2	20021567	METER COVER
3	66005868	TRAP DOOR
4	10172099	ROLL PIN, 6MM X 70MM
5	10153086	SPRING, TRAP DOOR
6	10591992	SCREW, 6MM X 16MM
7	6092	SPRING, EJECTOR BLOCK
8	6204.A	EJECTOR BLOCK, STANDARD
9	6225	NUT, EJECTOR BLOCK
10	6210	PIN, PRESSURE SCRAPER
11	6218	SPRING, PIN SCRAPER
12	6090	SNAP RING, 6mm
13	6205	CONTROL WINDOW
14	6089	RUBBER RING
15	6219	PIN, METER WINDOW
16	10530060	SCREW, 5MM X 10MM
17	6232	PLASTIC FLAP
18	6233	SEED SHUTTER
19	10620004	WASHER, 5.5MM X 16MM X 1MM
20	NM-0501	NUT, HEX, JAM, 5mm, G8.8
21	6238	EJECTOR BLOCK, ALUMINUM, LARGE SEED
22	NM-0610	NUT, HEX, JAM, 6mm, G8.8
23	6233.1	PLATE, RESTRICTOR FOR SMALL SEED (HEMP, CANOLA)

7073.N
4.5" STANDARD
GUAGE WHEEL

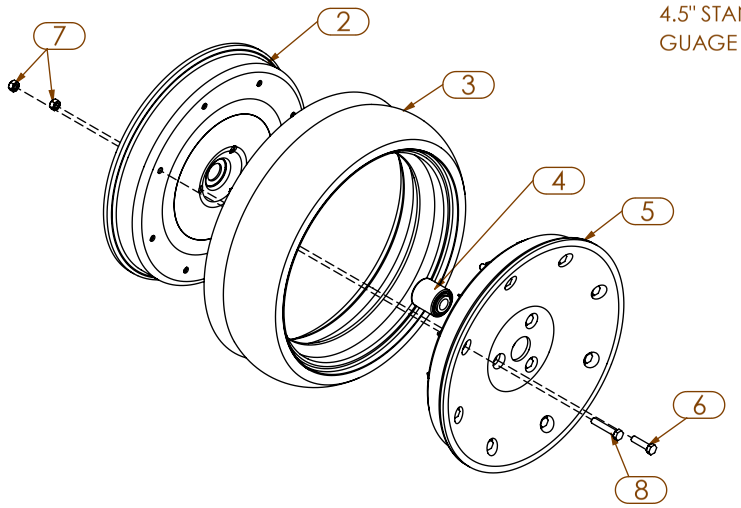

AA98187
4.5" CAST SPOKE
GUAGE WHEEL

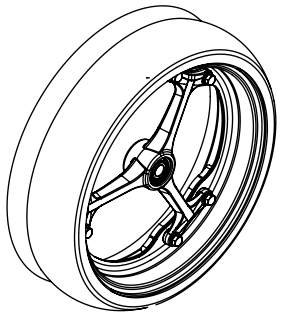

7073.SA
2" NARROW
GUAGE WHEEL

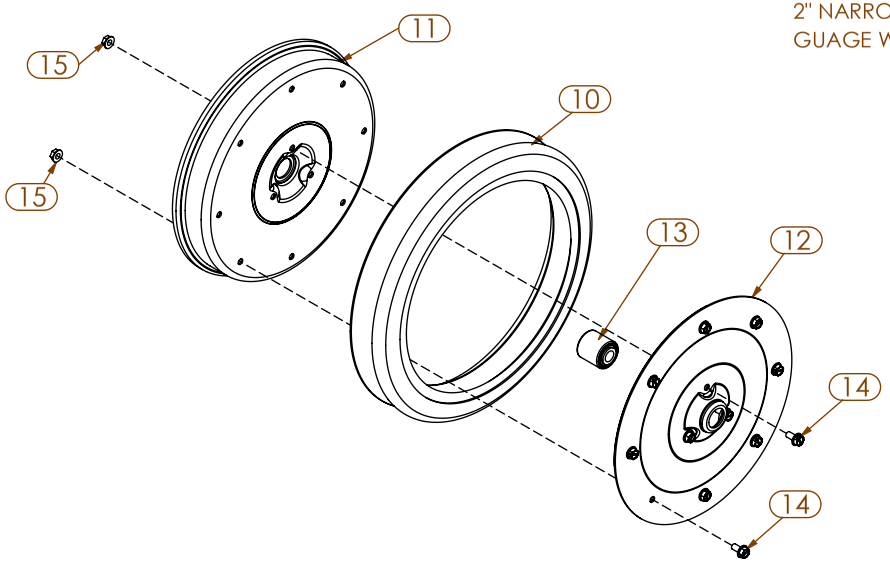

7073.SB
2" NARROW FLAT
GUAGE WHEEL

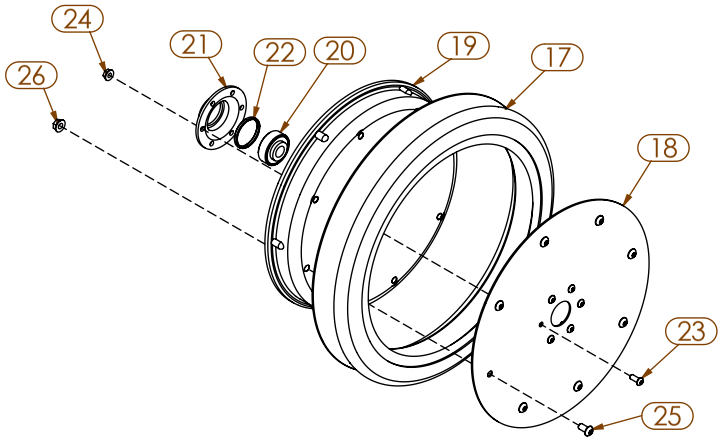

ITEM	PART NUMBER	DESCRIPTION
1	7073.N	GAUGE WHEEL ASM
2	7073.3SA	INNER RIM
3	7073.2	TIRE
4	900125	BEARING, 40mm
5	7073.3	OUTER RIM
6	H-2104	BOLT, HEX, 5/16"-18 X 1-1/4" G5
7	N-1001	NUT, HEX, 5/16"-18, G5
8	H-2130	BOLT, HEX, 5/16"-18 X 1-3/4" G5
9	7073.SA	NARROW GAUGE WHEEL ASM
10	7073.2S	TIRE, NARROW
11	802159	INNER RIM
12	802160	OUTER RIM
13	900125	BEARING, 40mm
14	H-2065	BOLT, HEX FLANGE, 5/16"-18 X 5/8"
15	F37339	NUT, SER. FLANGE, 5/16"-18
16	7073.SB	FLAT NARROW GAUGE WHEEL ASM
17	7073.2S	TIRE, NARROW
18	7073.1SB	OUTER RIM (STEEL)
19	7073.3SB	INNTER RIM (STEEL)
20	KA2014	BEARING, 19.3MM
21	900404	BEARING HOUSING
22	900405	SPACER
23	F24050	SCREW, SBH, 1/4"-20 X 5/8"
24	N-0615	NUT, FLANGE, 1/4"-20
25	F24068	SCREW, SBH, 5/16"-18 X 5/8"
26	F37339	NUT, SER. FLANGE, 5/16"-18
27	AA98187	GUAGE WHEEL, 4.5" CAST SPOKE
28	A84062	TIRE, GUAGE WHEEL, 14.5 X 16"
29	A101571	RIM, GUAGE WHEEL OUTER
30	A101570	RIM, GUAGE WHEEL INNER
31	A114438	HUB, SPOKED GUAGE WHEEL
32	AN212132	AN212132
33	40M7304	SNAP RING, INTERNAL, 40MM X 1.75MM
34	A116449	PLATE, SGW
35	19M10033	BOLT, HF, M8-1.25 X 30

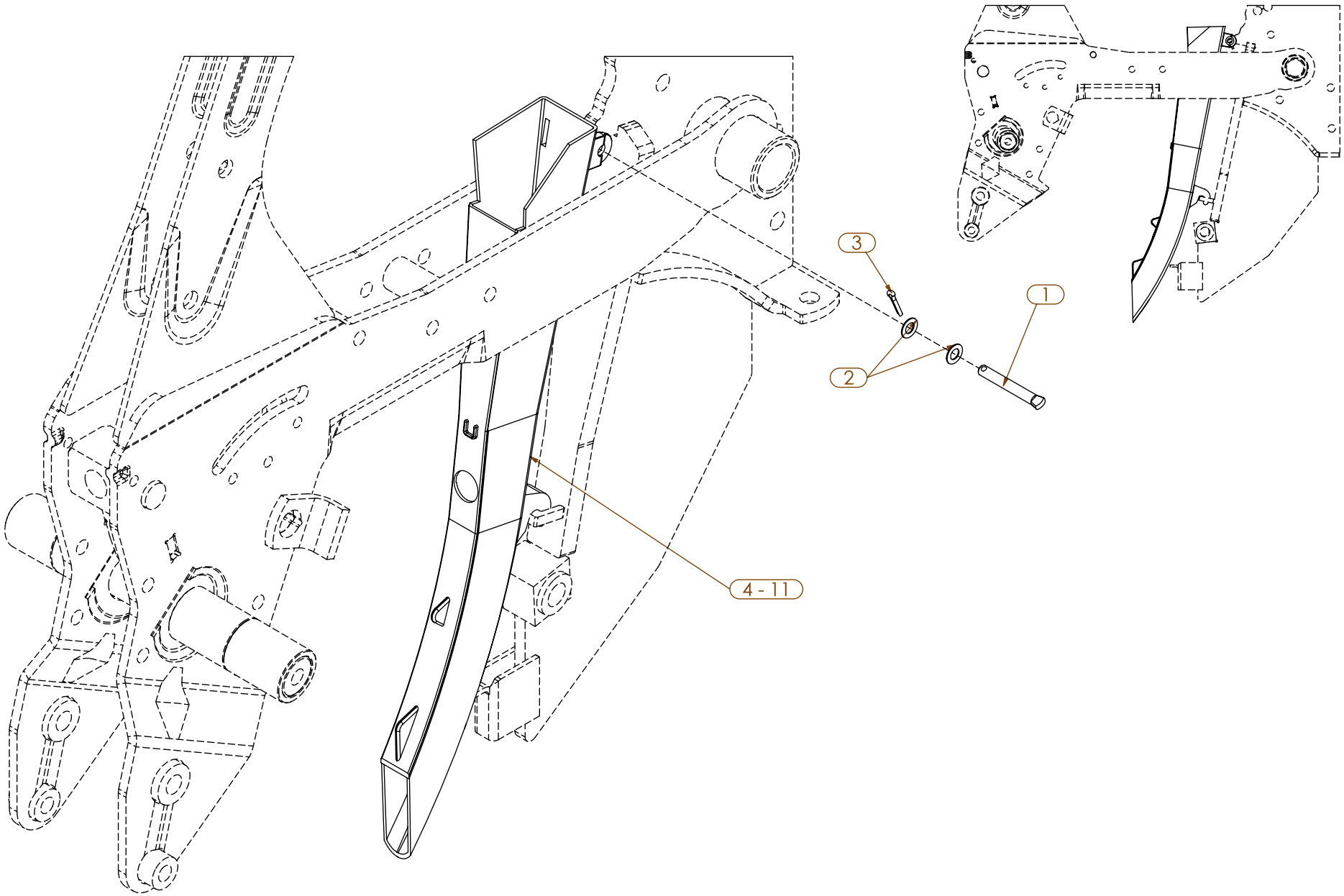
3
1
2
4 - 11

ITEM	PART NUMBER	DESCRIPTION
1	7086	PIN
2	10620008	WASHER, FLAT, 6.5 X 12 X .6
3	10170014	SPLIT PIN, 2.5 X 20
4	7079.1	STD. SEED TUBE, w/HOLE, NO SENSOR
5	7079.2S	SEED TUBE, W/ SENSOR DJ 3-LED
6	D2440891S1	SEED SENSOR NG+ DJ 3-LED
7	300694	SEED TUBE W SENSOR, DJ 10-LED
8	300844	SEED SENSOR W/O TUBE, DJ 10-LED
9	7079.3S	SEED TUBE, PEANUT, w/ SENSOR
10	7079.3M	SEED TUBE, PEANUT, NO SENSOR
11	7079.4	SEED TUBE, w/ LARGE HOLE, NO SENSOR

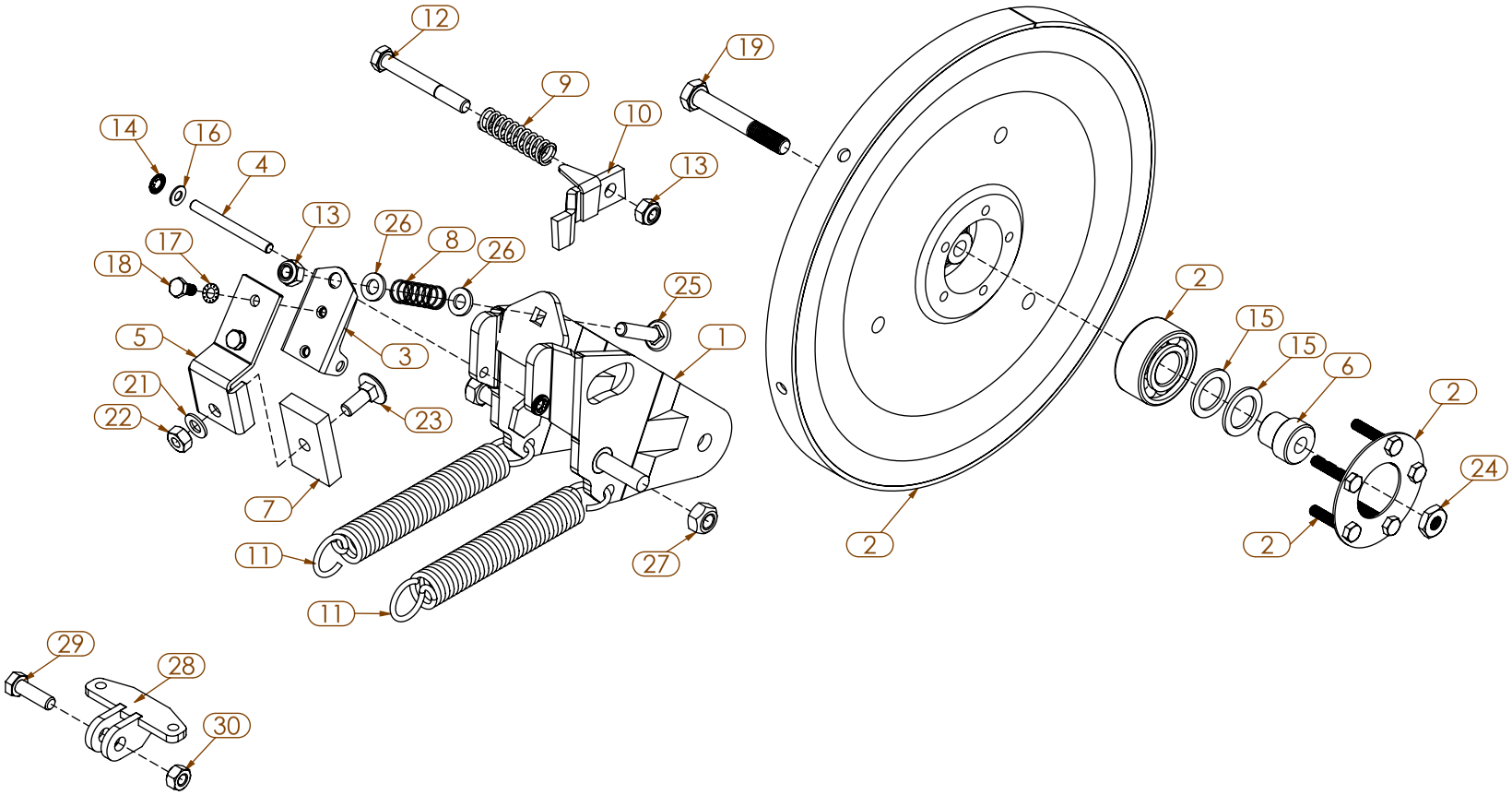
12
19
9
10
14
16
4
13
13
26
8
26
17
18
25
2
15
15
6
2
5
3
1
21
22
23
24
7
2
2
11
27
11
29
28
30

ITEM	PART NUMBER	DESCRIPTION
1	7271	PRESS WHEEL FRAME
2	65003090	PRESS WHEEL
3	20035181	SCRAPER PIVOT
4	20032210	PIVOT PIN
5	20035180	SCRAPER SUPPORT
6	30073076	SPACER, PRO-WHEEL
7	10200279	SCRAPER, PRO-WHEEL
8	5681.B	SPRING, COMPRESSION
9	10159037	SPRING
10	65009181	LOCK
11	7259	SPRING
12	30511077	BOLT, HEX, M8 X 70mm
13	10603008	NUT, NYLOCK, 8mm
14	6090	SNAP RING, 6mm
15	10622099	WASHER, 20.5 X 30 X 2mm
16	10620009	WASHER, 6 X 12 X 1mm
17	10629007	WASHER, EXTERNAL LOCK, 6mm
18	10500091	BOLT, HEX, M6 X 12mm
19	10512024	BOLT, HEX, M10 X 70mm
20	7275	SHOULDER BOLT, 10 X 32mm
21	10620063	WASHER, FLAT, 8.5 X 16 X 1.5
22	30600008	NUT, HEX, 8mm
23	30561055	BOLT, SN, M8 X 22mm
24	30601010	NUT, JAM, 10MM
25	30561058	CARR. BOLT, 8 X 35mm, CL8.8
26	30620064	WASHER, 8.5 X 16 X 2mm
27	10605010	NUT, LOCK, M10
28	200832	SPRING BRACKET WA
29	H-2100	BOLT, HEX, 5/16"-18 X 1" G5
30	N-1001	NUT, HEX, 5/16"-18, G5

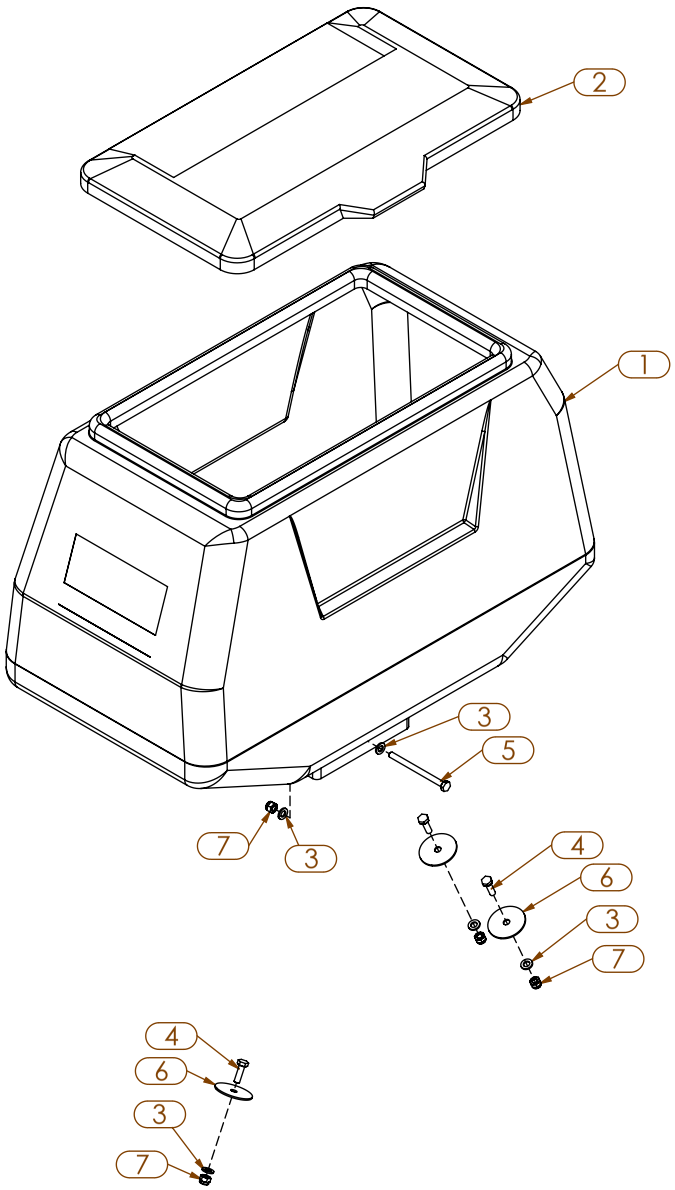
2
1
3
5
7
3
4
6
3
7
4
6
3
7

ITEM	PART NUMBER	DESCRIPTION
1	7077.2	HOPPER, 2 BUSHEL
2	7104.CO	NG+4 LID
3	W-0410	WASHER, FLAT, 1/4" SAE G8
4	HM-0620	HEX, BOLT, 6 X 20, G8.8
5	HM-0680	HEX, BOLT, 6 X 80, G8.8
6	W-0415	WASHER, FLAT, 1/4" X 1-1/2"
7	NM-0605	NUT, NYLOCK, 6mm, G8.8

LEFT TWIN HOPPER

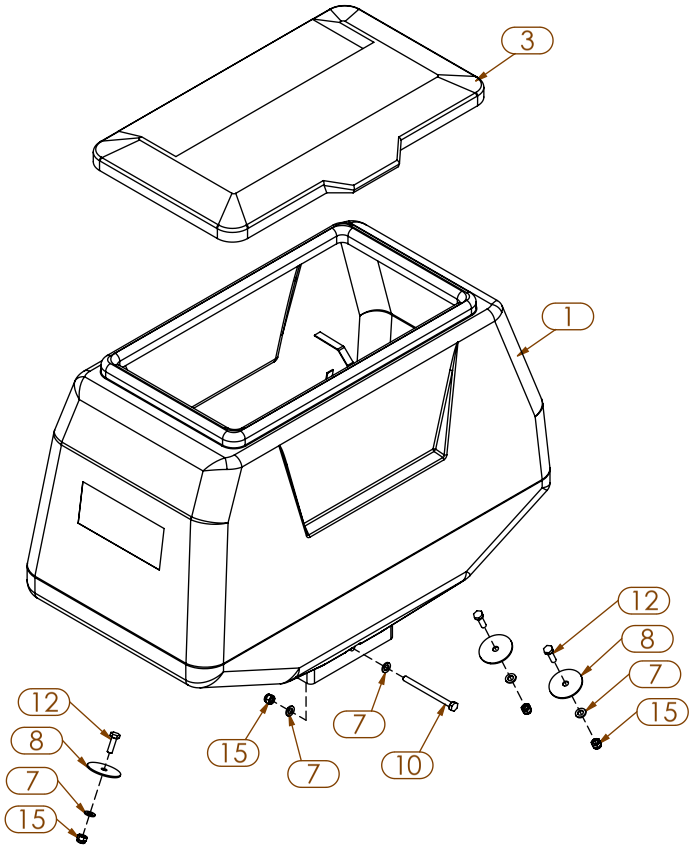

RIGHT TWIN HOPPER

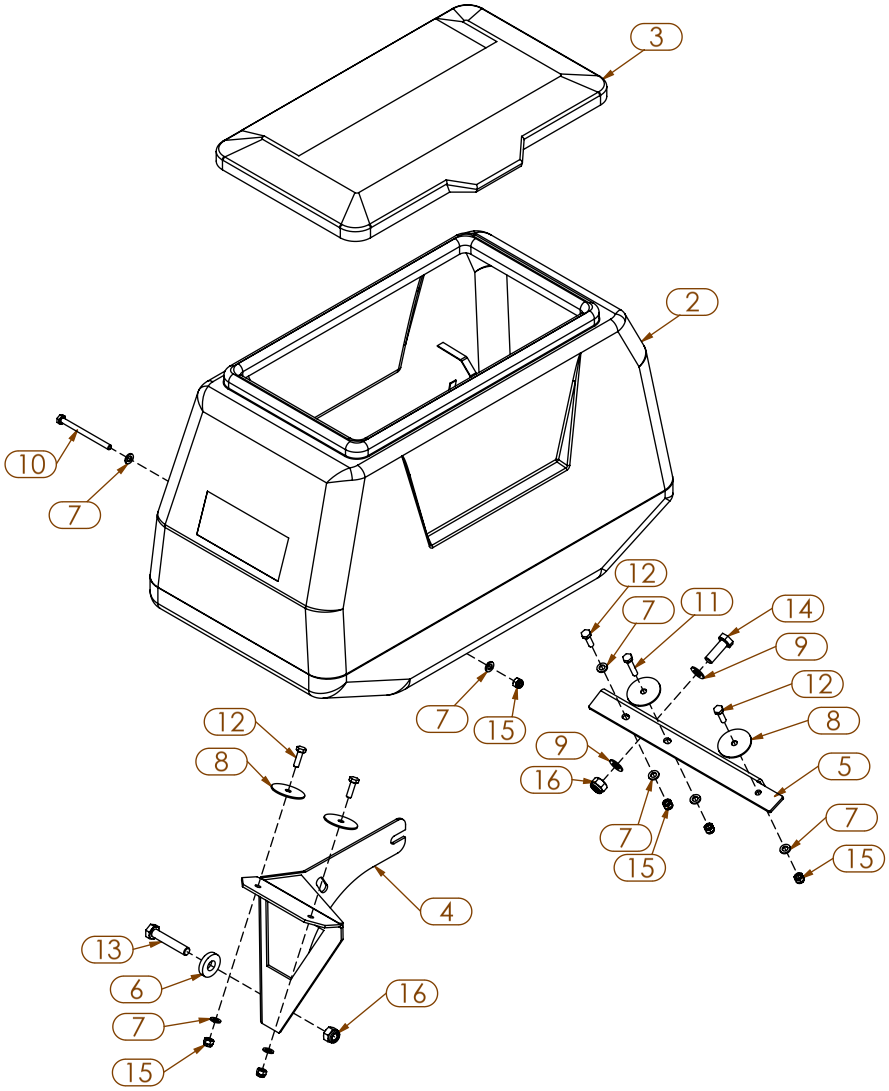

ITEM	PART NUMBER	DESCRIPTION
1	7077.3	HOPPER, TWINROW 2 BUSHEL L
2	7077.3A	HOPPER, TWINROW 2 BUSHEL R
3	7104.CO	NG+4 LID
4	800501	REVERSE HOPPER BRACKET WA
5	800518	FRONT BRACKET WA
6	10621056	WASHER, FLAT, 13 X 30 X 6
7	W-0410	WASHER, FLAT, 1/4" SAE G8
8	W-0415	WASHER, FLAT, 1/4" X 1-1/2"
9	W-2410	WASHER, FLAT, 3/8" SAE G8
10	HM-0680	HEX, BOLT, 6 X 80, G8.8
11	HM-0630	HEX, BOLT, 6 X 30, G8.8
12	HM-0620	HEX, BOLT, 6 X 20, G8.8
13	HM-41055	HEX, BOLT, 10 X 55, G8.8
14	HM-41030	HEX, BOLT, 10 X 30, G8.8
15	NM-0605	NUT, NYLOCK, 6mm, G8.8
16	NM-21015	NUT, NYLOCK, 10mm, G8.8

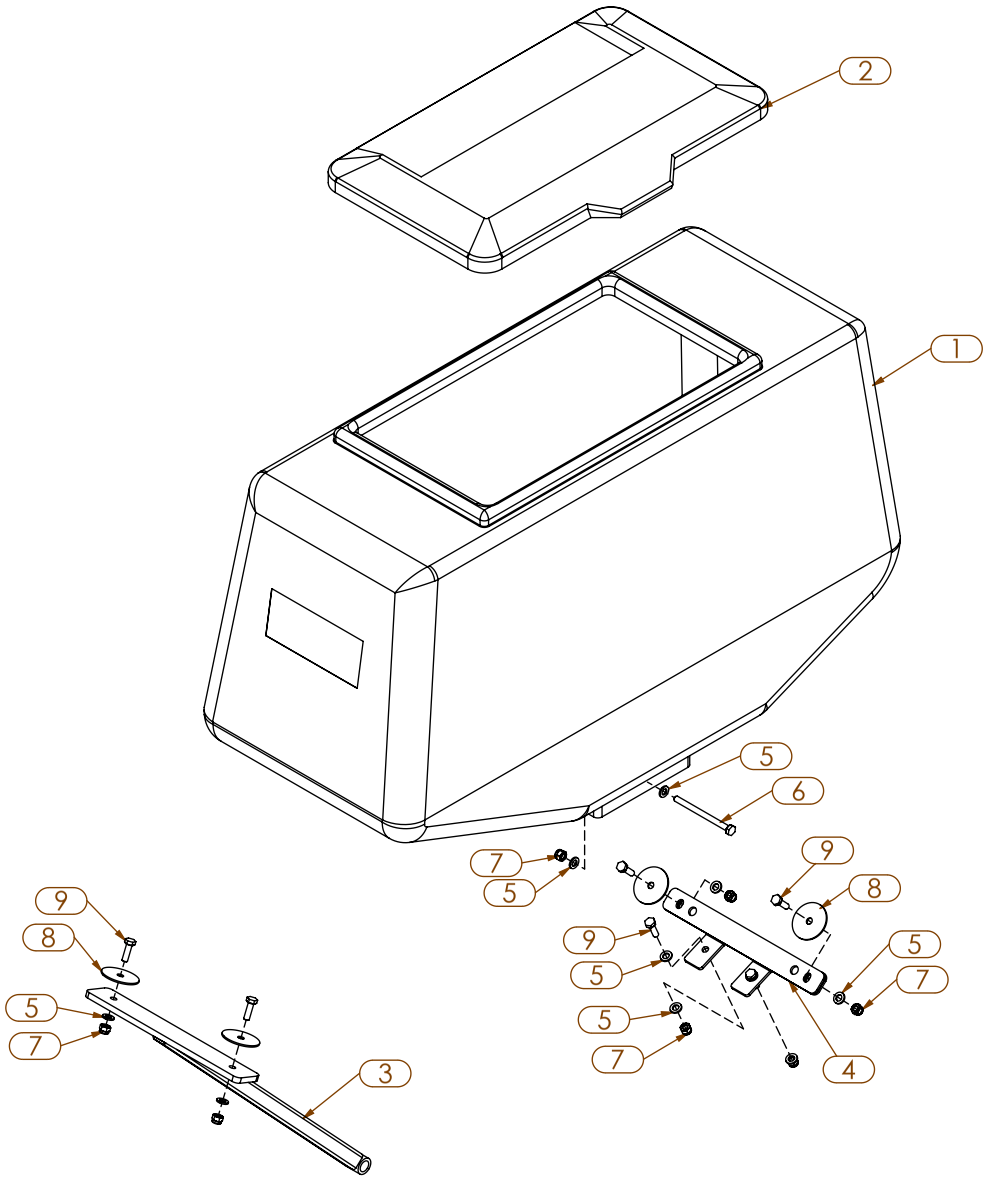
2
1
5
6
7
5
9
8
9
5
5
7
5
7
4
9
8
5
7
3

ITEM	PART NUMBER	DESCRIPTION
1	7077.4	HOPPER, 3 BUSHEL
2	7104.CO	NG+4 LID
3	900383	REAR BRACE WA
4	900384	FRONT BRACE WA
5	W-0410	WASHER, FLAT, 1/4" SAE G8
6	HM-0680	HEX, BOLT, 6 X 80, G8.8
7	NM-0605	NUT, NYLOCK, 6mm, G8.8
8	W-0415	WASHER, FLAT, 1/4" X 1-1/2"
9	HM-0620	HEX, BOLT, 6 X 20, G8.8

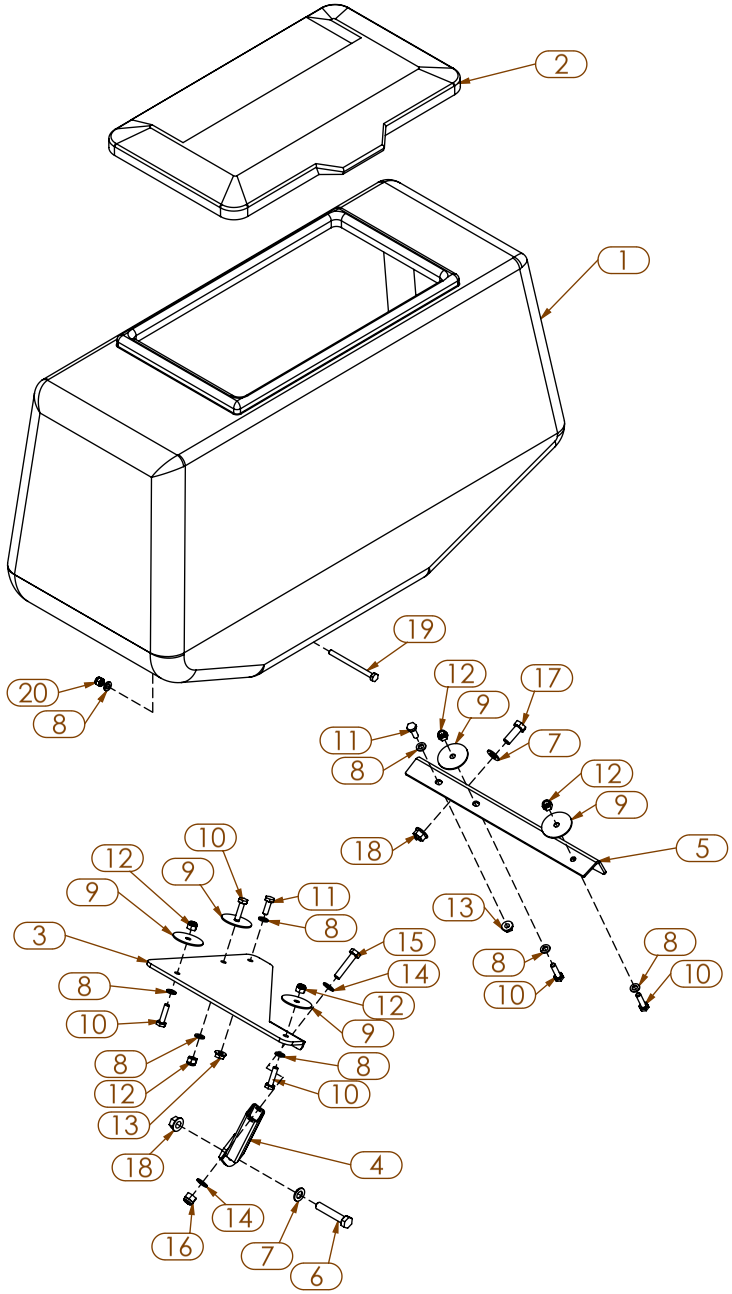
2
1
19
20
8
12
17
9
11
7
8
12
9
18
5
10
12
9
11
9
8
13
3
15
8
8
14
10
12
10
9
8
8
12
10
13
18
4
14
16
7
6

ITEM	PART NUMBER	DESCRIPTION
1	7077.4	HOPPER, 3 BUSHEL
2	7104.CO	NG+4 LID
3	804475	PLATE, MOUNTING, 3 BU REV
4	201229	SUPPORT ARM, 3 BU REV
5	201230	BRACKET WA, FRONT, 3 BU REV
6	H-3200	BOLT, HEX, 3/8"-16 X 2" G8
7	W-2410	WASHER, FLAT, 3/8" SAE G8
8	W-0410	WASHER, FLAT, 1/4" SAE G8
9	W-0415	WASHER, FLAT, 1/4" X 1-1/2"
10	H-1000	BOLT, HEX, 1/4"-20 X 1" G5
11	H-1074	BOLT, HEX, 1/4"-20 X 3/4" G5
12	N-0610	NUT, NYLOCK 1/4"-20
13	N-0615	NUT, FLANGE, 1/4"-20
14	W-1410	WASHER, FLAT, 5/16" SAE G8
15	H-2120	BOLT, HEX, 5/16"-18 X 1-1/2" G5
16	N-1101	NUT, NYLOCK, 5/16"-18 G5
17	H-3100	BOLT, HEX, 3/8"-16 X 1" G8
18	N-2301	NUT, SER. FLANGE, 3/8"-16
19	HM-0680	HEX, BOLT, 6 X 80, G8.8
20	NM-0605	NUT, NYLOCK, 6mm, G8.8

2 BUSHEL HOPPER (NEW)

LEFT ORIENTATION

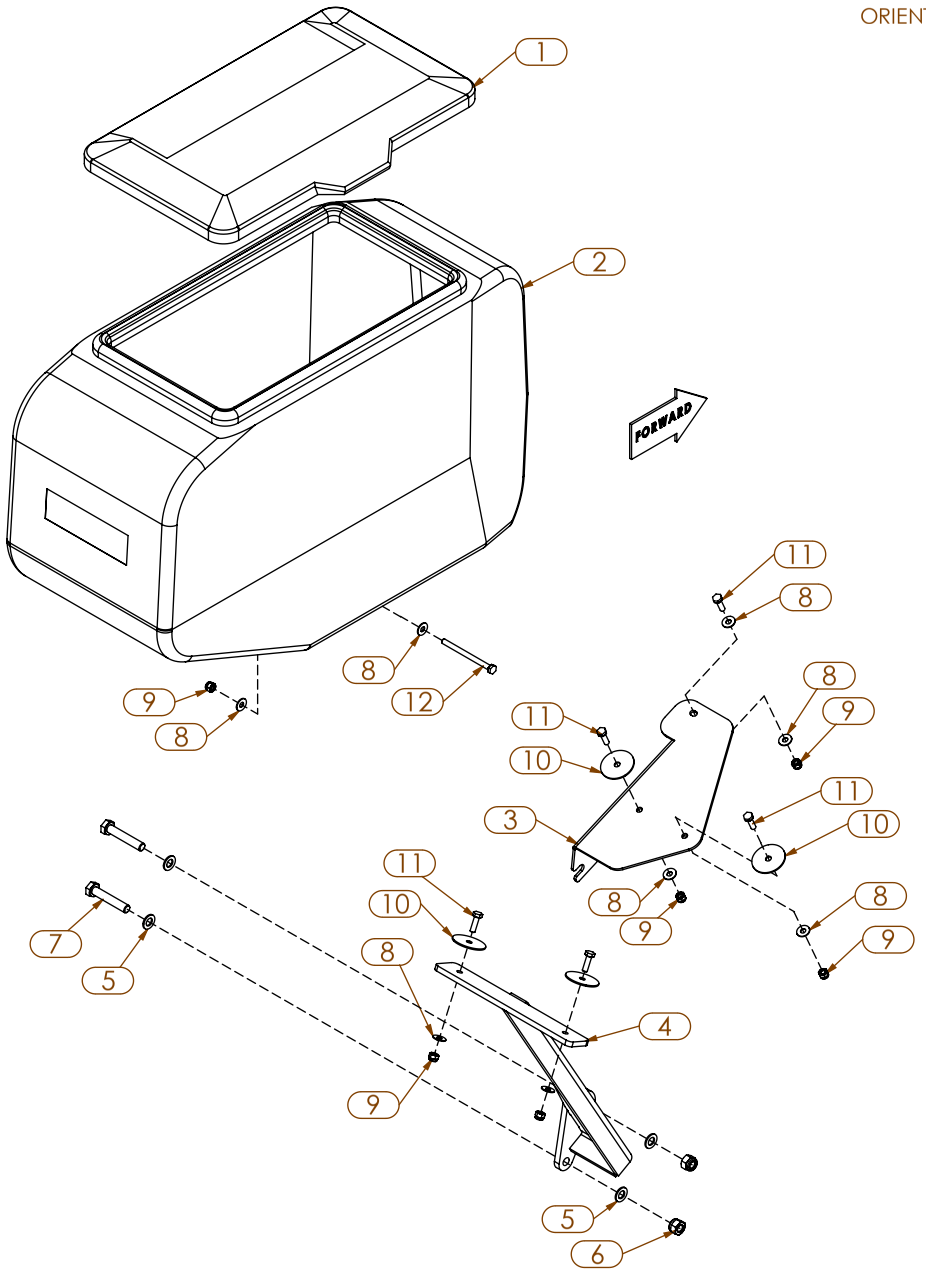

RIGHT ORIENTATION

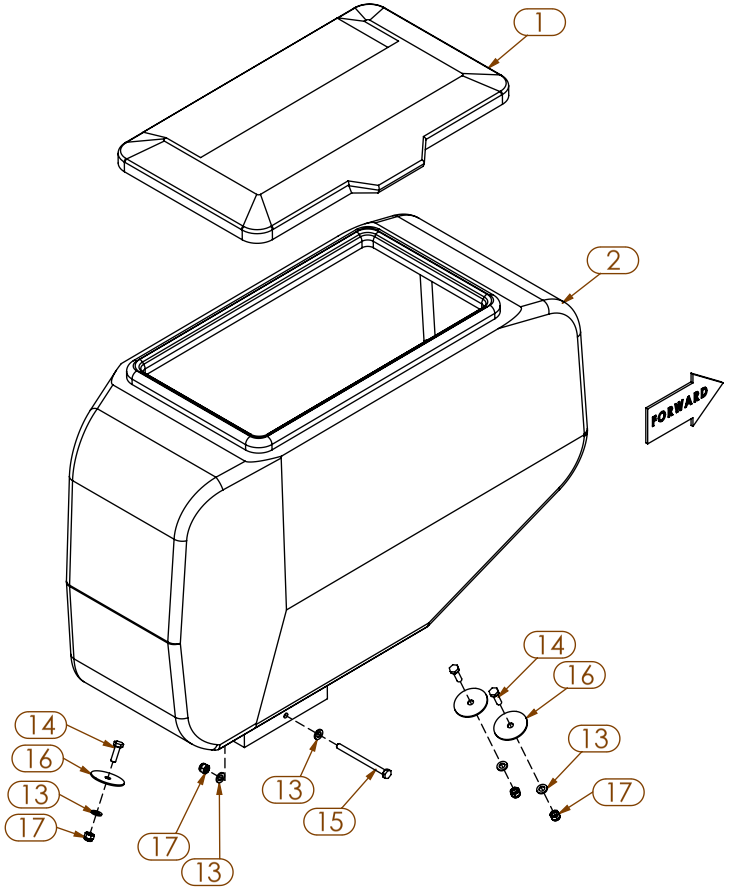

ITEM	PART NUMBER	DESCRIPTION
1	7104.CO	NG+4 LID
2	300505	SEED HOPPER, TR, 2BU.
3	803434	HOPPER SUPPORT, FRONT
4	201094	HOPPER MNT WA, 300505
5	W-2410	WASHER, FLAT, 3/8" SAE G8
6	NM-21015	NUT, NYLOCK, 10mm, G8.8
7	HM-41055	HEX, BOLT, 10 X 55, G8.8
8	W-9616	WASHER, FLAT, 6.5 X 16 X 1mm
9	NM-0605	NUT, NYLOCK, 6mm, G8.8
10	W-0415	WASHER, FLAT, 1/4" X 1-1/2"
11	HM-0620	HEX, BOLT, 6 X 20, G8.8
12	HM-0680	HEX, BOLT, 6 X 80, G8.8
13	W-0410	WASHER, FLAT, 1/4" SAE G8
14	HM-0620	HEX, BOLT, 6 X 20, G8.8
15	HM-0680	HEX, BOLT, 6 X 80, G8.8
16	W-0415	WASHER, FLAT, 1/4" X 1-1/2"
17	NM-0605	NUT, NYLOCK, 6mm, G8.8

CLOSING WHEEL, SYMETRICAL

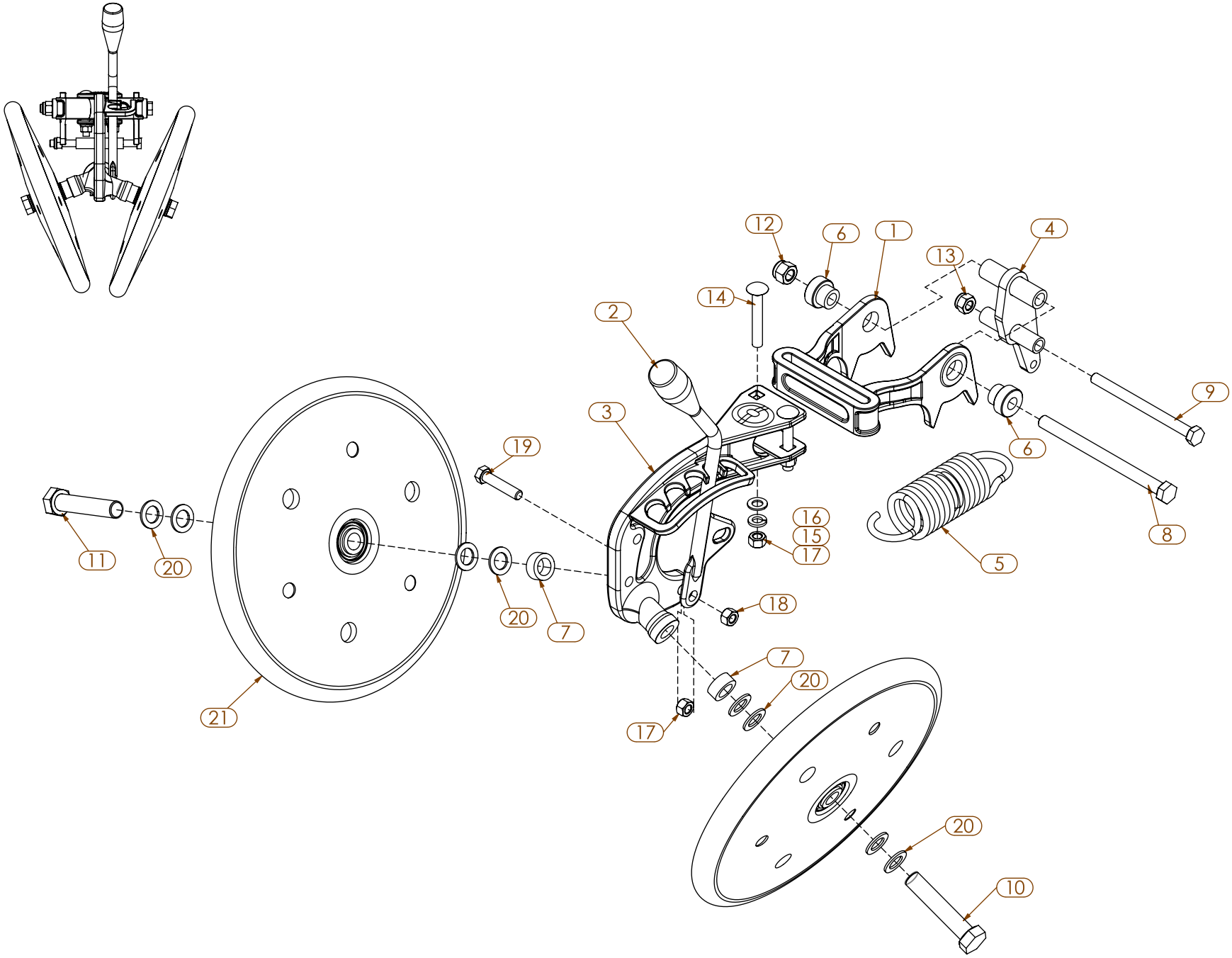

ITEM	PART NUMBER	DESCRIPTION
1	300955	MOUNT, CLOSING WHEEL
2	301066	CASTING, HANDLE, CLOSING WHEEL BRKT
3	300984	FRAME, CLOSING WHEEL, SYM
4	200471	BRACKET, SPRING WA
5	300432	SPRING, CLOSING WHEEL
6	800474.2	BUSHING
7	900159	BUSHING, 25 X 16.5 X 11mm
8	HM-56160	HEX, BOLT, 12 X 160, G8.8
9	HM-510130	HEX, BOLT, 10 X 130, G10.9
10	7258.DS	BOLT, HEX, SH, RT, 16 X 80
11	7258.GS	BOLT, HEX, SH, LT, 16 X 80mm
12	NM-31205	NUT, NYLOCK, 12mm, G8.8
13	NM-21015	NUT, NYLOCK, 10mm, G8.8
14	CB-2231	BOLT, CARR., 3/8"-16 X 2.50, G5
15	W-2610	WASHER, SPLIT, 3/8", G8
16	W-2410	WASHER, FLAT, 3/8" SAE G8
17	N-2001	NUT, HEX, 3/8"-16, G8
18	N-2300	NUT, HEX, CL, 3/8"-16
19	H-3130	BOLT, HEX, 3/8"-16 X 1-3/4" G8
20	10622026	WASHER 16.5 X 26 X 2mm
21	7074.N	V-CLOSING WHEEL

LEFT ORIENTATION

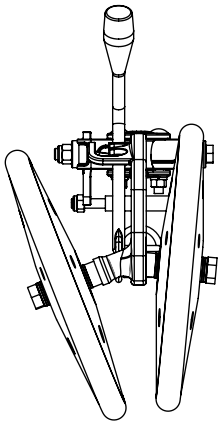

RIGHT ORIENTATION

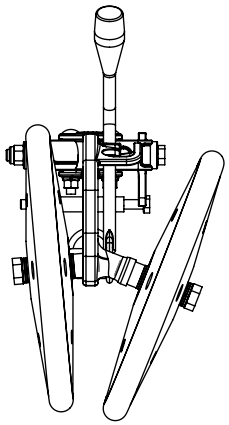

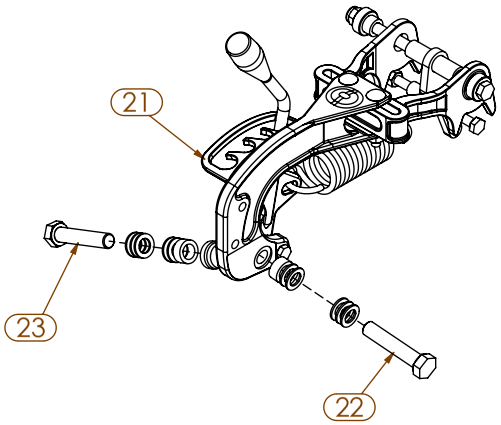

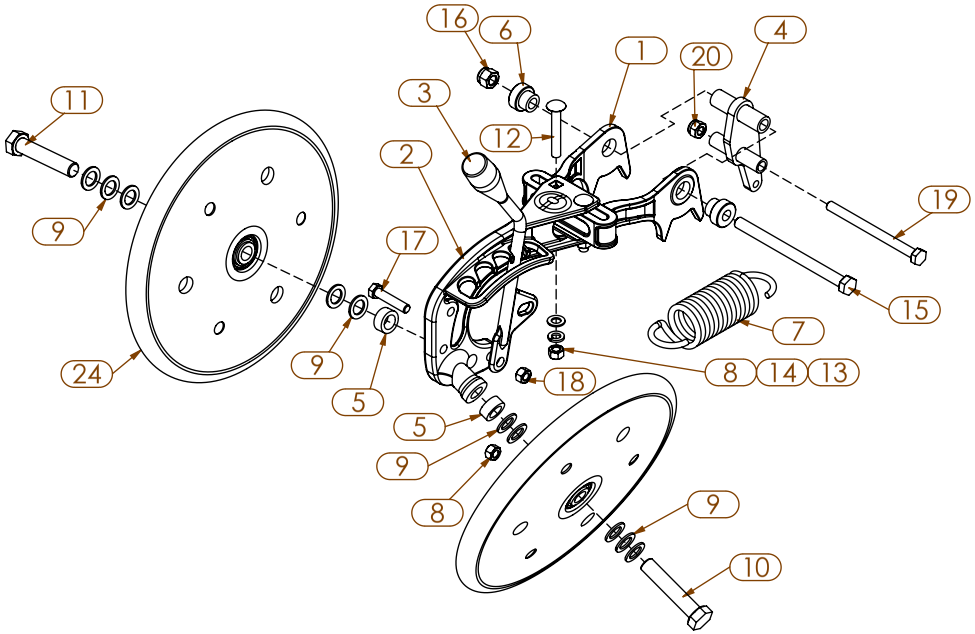

NOTE: ONLY PARTS SPECIFIC TO LEFT ORIENTATION ARE IDENTIFIED.

ITEM	PART NUMBER	DESCRIPTION
1	300955	MOUNT, CLOSING WHEEL
2	300956	FRAME, CLOSING WHEEL, TR STD
3	301066	CASTING, HANDLE, CLOSING WHEEL BRKT
4	200471	BRACKET, SPRING WA
5	900159	BUSHING, 25 X 16.5 X 11mm
6	800474.2	BUSHING
7	300432	SPRING, CLOSING WHEEL
8	N-2001	NUT, HEX, 3/8"-16, G8
9	10622026	WASHER, FLAT, 16.5 X 26 X 2
10	7258.DS	BOLT, HEX, SH, RT, 16 X 80
11	7258.GS	BOLT, HEX, SH, LT, 16 X 80mm
12	CB-2231	BOLT, CARR., 3/8"-16 X 2.50, G5
13	W-2410	WASHER, FLAT, 3/8" SAE G8
14	W-2610	WASHER, SPLIT, 3/8", G8
15	HM-56160	HEX, BOLT, 12 X 160, G8.8
16	NM-31205	NUT, NYLOCK, 12mm, G8.8
17	H-3130	BOLT, HEX, 3/8"-16 X 1-3/4" G8
18	N-2300	NUT, HEX, CL, 3/8"-16
19	HM-510130	HEX, BOLT, 10 X 130, G10.9
20	NM-21015	NUT, NYLOCK, 10mm, G8.8
21	300983	FRAME, CLOSING WHEEL, TR REV
22	7258.DS	BOLT, HEX, SH, RT, 16 X 80
23	7258.GS	BOLT, HEX, SH, LT, 16 X 80mm
24	7074.N	V-CLOSING WHEEL

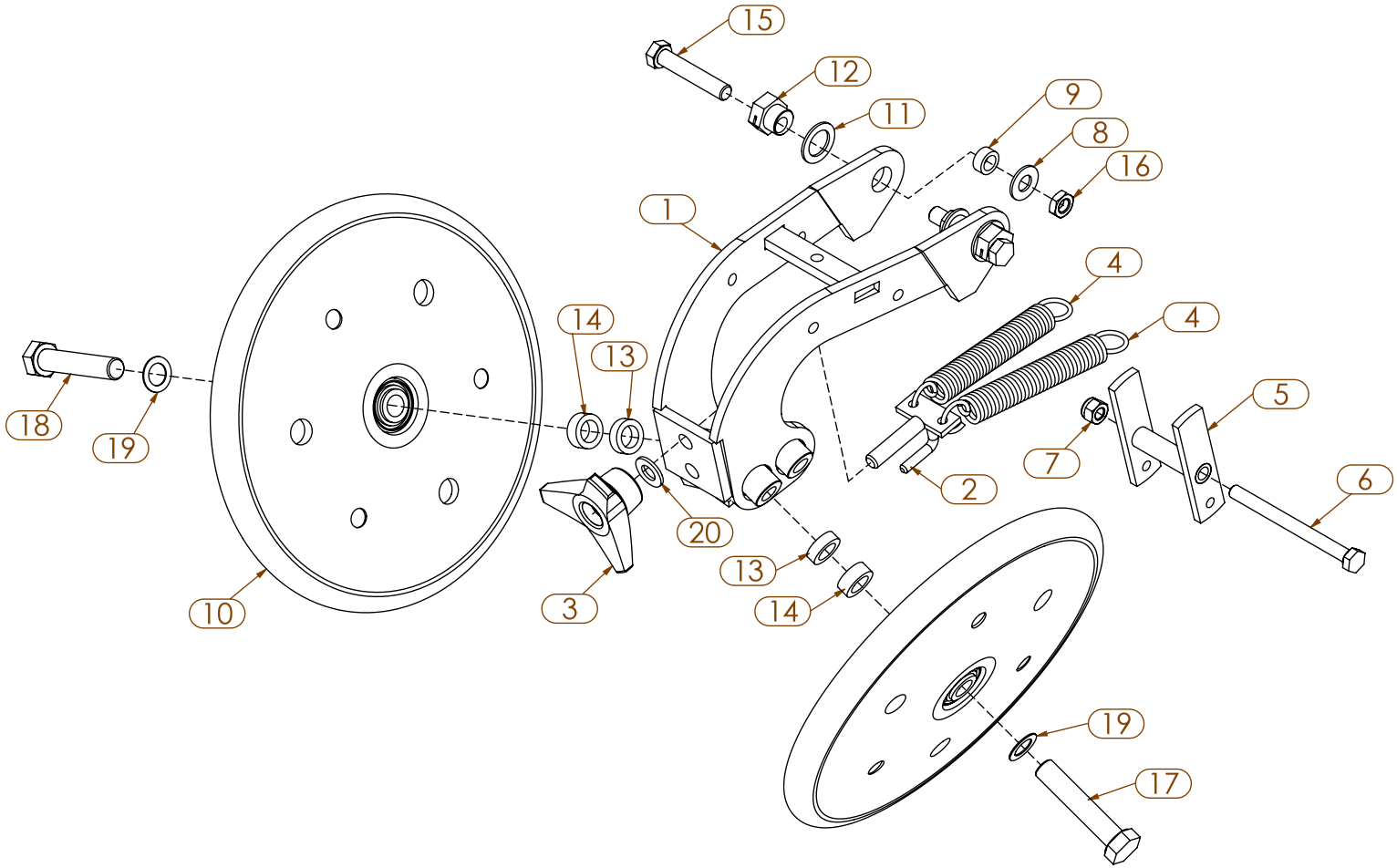
15
12
11
9
8
16
1
4
4
5
6
7
2
14
13
20
13
14
3
10
18
19
19
17

ITEM	PART NUMBER	DESCRIPTION
1	66005369	BRKT ADJ CLOSING WHEEL
2	7071.A	ADJUSTMENT ROD
3	7082	KNOB
4	7259	SPRING
5	7262.A	SPRING SUPPORT
6	HM-510120	HEX, BOLT, 10 X 120, G10.9
7	NM-21015	NUT, NYLOCK, 10mm, G8.8
8	10621046	WASHER, FLAT, 13 X 27 X 2
9	7260	SPACER
10	7074.N	V-CLOSING WHEEL
11	10623011	WASHER, FLAT, 21 X 32 X 2
12	E9051	ECCENTRIC BUSHING
	800474.2	STRAIGHT BUSHING
13	900238	BUSHING, 16.5 X 25 X 8mm
14	4694	BUSHING, 16 X 25 X 10mm
15	HM-61265	HEX, BOLT, 12 X 65, G10.9
16	NM-31203	NUT, HEX, JAM, 12mm, G8.8
17	7258.DA	BOLT, HEX, RT, 16 X 80
18	7258.GA	BOLT, HEX, LT, 16 X 80
19	10622024	WASHER, FLAT, 16.5 X 26 X 1
20	W-4410	WASHER, FLAT, 1/2" SAE G8

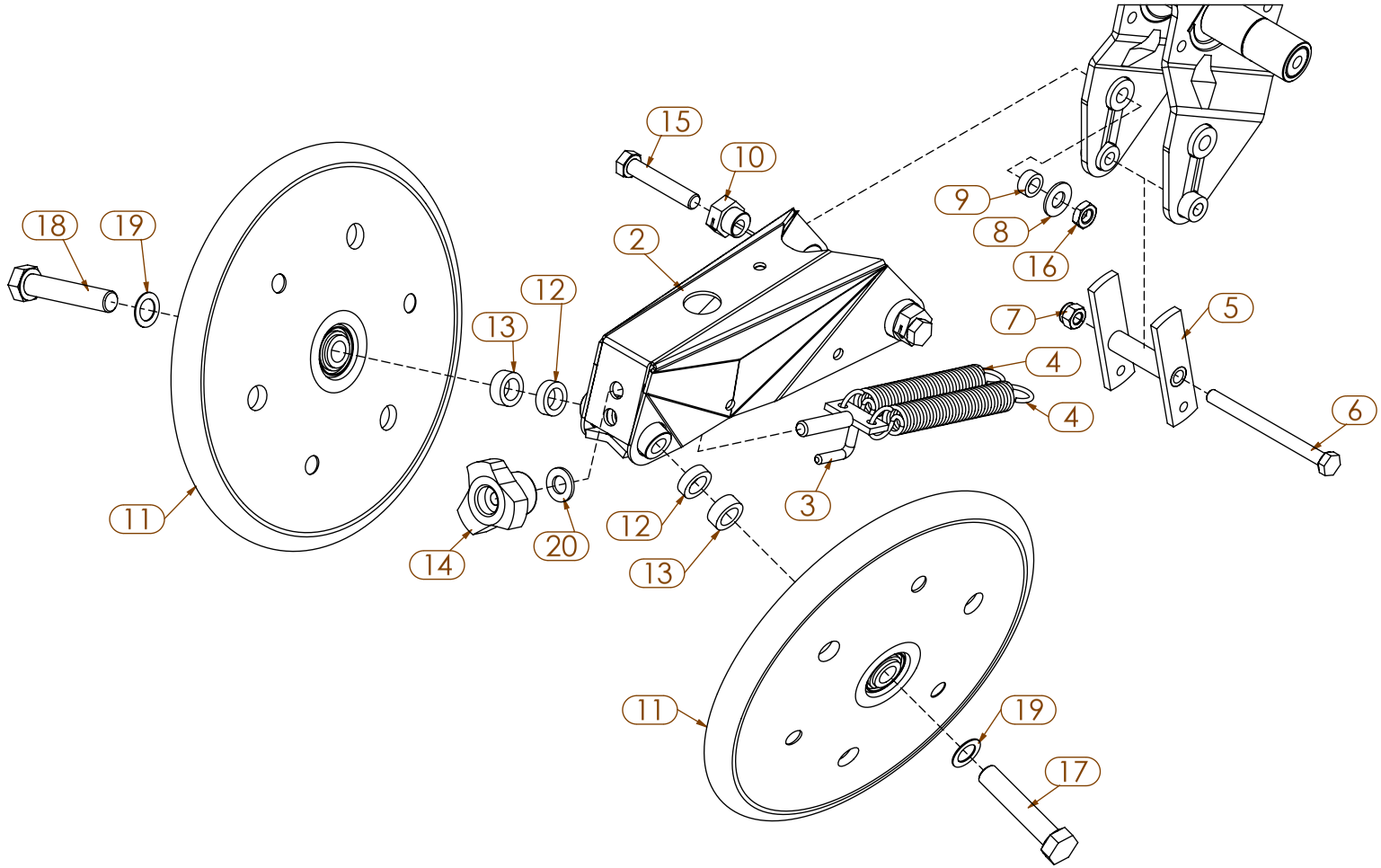
15
10
9
8
16
18
19
2
12
13
7
5
4
4
6
3
11
14
20
12
13
11
19
17

ITEM	PART NUMBER	DESCRIPTION
1	650670	NARROW CLOSING WHEEL
2	7080.E	BRACKET ADJ CLOSE WHEEL
3	7071.A	ADJUSTMENT ROD
4	7259	SPRING
5	7262.A	SPRING SUPPORT
6	HM-510120	HEX, BOLT, 10 X 120, G10.9
7	NM-21015	NUT, NYLOCK, 10mm, G8.8
8	10621046	WASHER, FLAT, 13 X 27 X 2
9	7260	SPACER
10	E9051	ECCENTRIC BUSHING
	800474.2	STRAIGHT BUSHING
11	7074.N	V-CLOSING WHEEL
12	900238	BUSHING, 16.5 X 25 X 8mm
13	4694	BUSHING, 16 X 25 X 10mm
14	7082.1A	KNOB
15	HM-61265	HEX, BOLT, 12 X 65, G10.9
16	NM-31203	NUT, HEX, JAM, 12mm, G8.8
17	7258.DA	BOLT, HEX, RT, 16 X 80
18	7258.GA	BOLT, HEX, LT, 16 X 80
19	10622024	WASHER, FLAT, 16.5 X 26 X 1
20	W-4410	WASHER, FLAT, 1/2" SAE G8

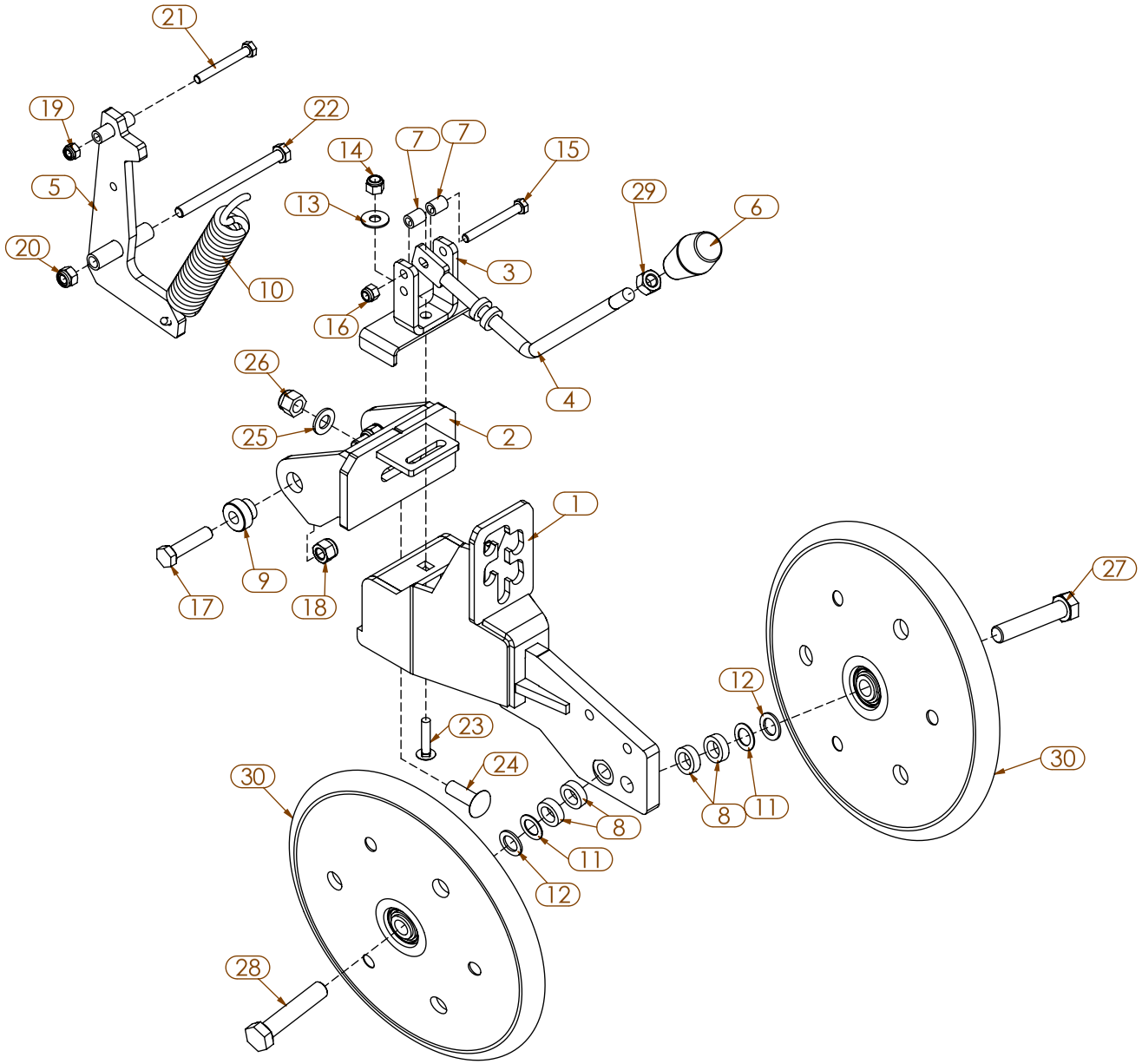
21
19
22
14
7
7
15
5
13
29
6
20
10
3
16
4
26
25
2
1
9
17
18
27
12
23
24
30
30
8
8
11
11
12
28

ITEM	PART NUMBER	DESCRIPTION
1	800583	CLOSING BRACKET WA
2	800582	FRONT BRACKET WA
3	800585	CLOSING BRACKET WA
4	800584	HANDLE WA
5	200001	SPRING PLATE WA
6	7082.AM	KNOB
7	800617	BUSHING
8	900238	BUSHING, 16.5 X 25 X 8mm
9	800474.1	BUSHING, SHORT
10	7075	SPRING
11	10622024	WASHER, FLAT, 16.5 X 26 X 1
12	10622026	WASHER, FLAT, 16.5 X 26 X 2
13	W-2210	WASHER, FLAT, 3/8" USS G8
14	N-2101	NUT, NYLOCK 3/8"-16 G8
15	H-2275	BOLT, HEX 5/16"-18 X 2-3/4" Z G5
16	N-1101	NUT, NYLOCK, 5/16"-18 G5
17	HM-61250	HEX, BOLT, 12 X 50, G10.9
18	NM-31205	NUT, NYLOCK, 12mm, G8.8
19	NM-1812	NUT, NYLOCK, 8mm, G8.8
20	NM-21015	NUT, NYLOCK, 10mm, G8.8
21	HM-2865	HEX, BOLT, 8 X 65, G8.8
22	HM-510130	HEX, BOLT, 10 X 130, G10.9
23	CB-1214	BOLT, CARR., 5/16"-18 X 1.50, G5
24	CB-4411	BOLT, CARR., 1/2"-13 X 1.50, G5
25	W-4410	WASHER, FLAT, 1/2" SAE G8
26	N-4101	NUT, NYLOCK 1/2"-13 G8
27	7258.DS	BOLT, HEX, SH, RT, 16 X 80
28	7258.GS	BOLT, HEX, SH, LT, 16 X 80mm
29	N-4001	NUT, HEX, 1/2"-13, G8
30	7074.N	V-CLOSING WHEEL

7074.N CLOSING WHEEL

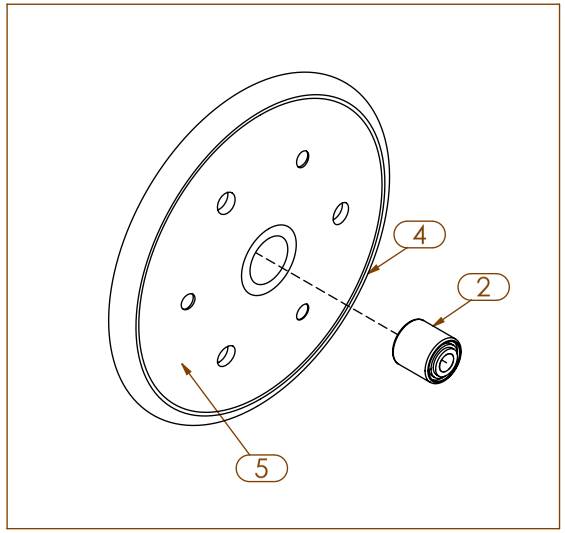

100376 CAST CLOSING WHEEL

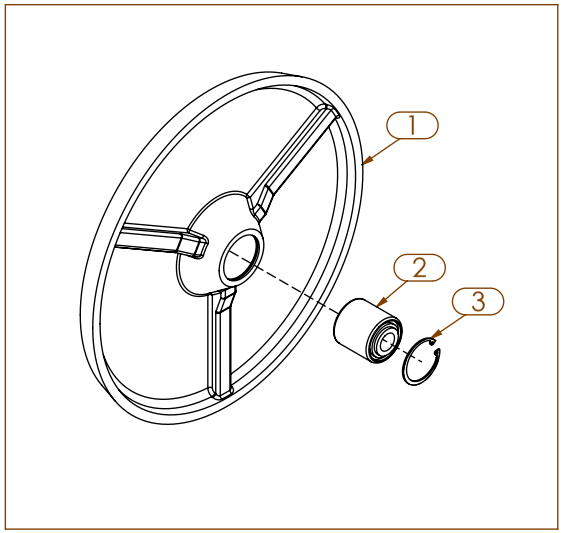

ITEM	PART NUMBER	DESCRIPTION
1	803255	CLOSING WHEEL
2	900125	BEARING, 40mm
3	300732	SNAP RING, 1-1/2"
4	7074.2	TIRE, 1 X 12
5	7074.A40	NYLON RIM HALF

DISC CLOSING W/ FLAT PRESS WHEEL

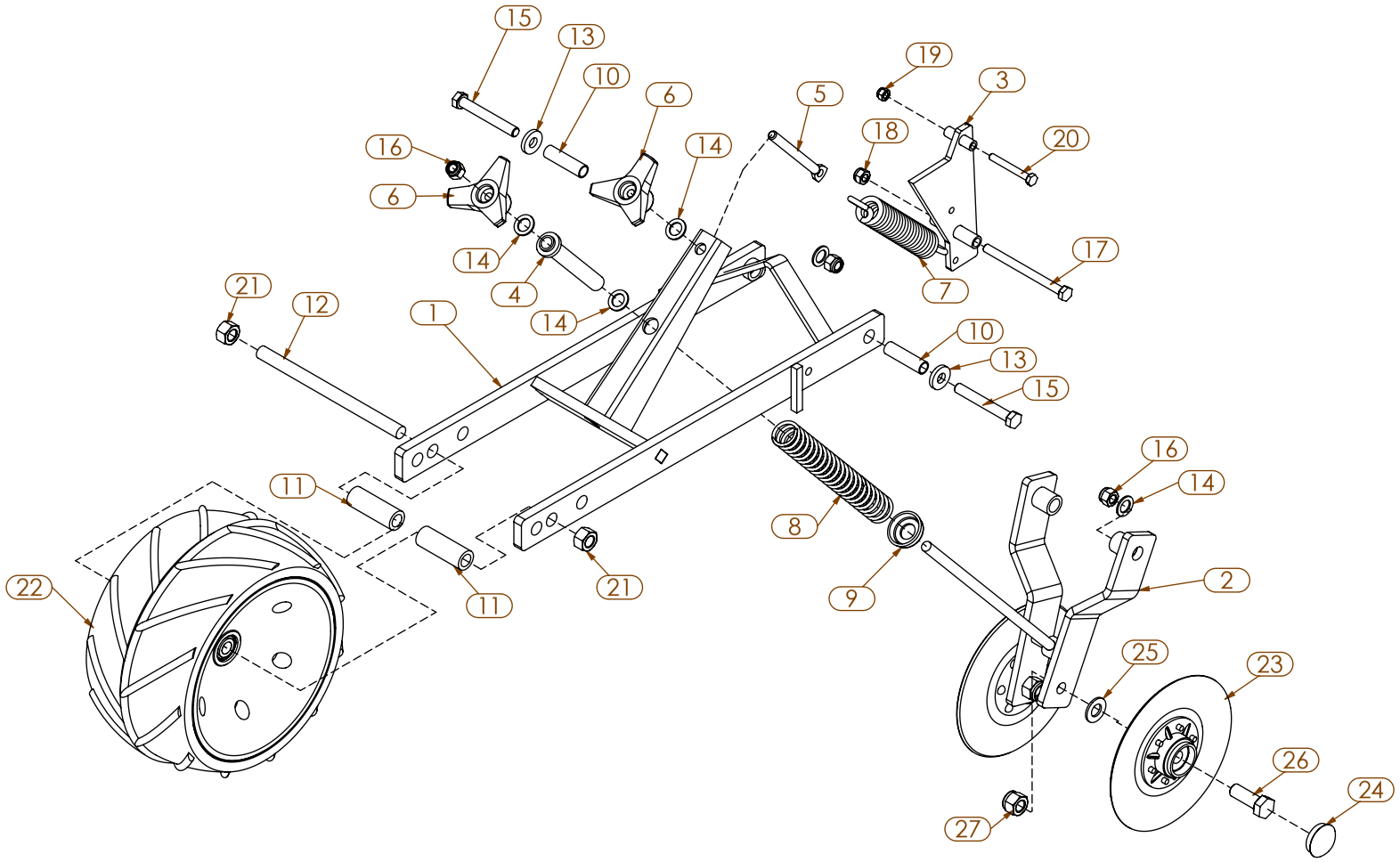

ITEM	PART NUMBER	DESCRIPTION
1	7207.2	FRAME WA
2	7210.A	BRACKET WA
3	7211.A	STOP WA
4	7209	SLEEVE WA
5	7071.2	ADJUSTMENT ROD, 12 X 130mm
6	7082	KNOB
7	7075	SPRING, EXTENSION
8	5513	SPRING, COMPRESSION
9	11210	CAP
10	7028	BUSHING, 16 X 13 X 2.32mm
11	900252	BUSHING, 1.00 X 2.81
12	7224	SHAFT
13	10621055	WASHER, FLAT, 13 X 30 X 5
14	10622026	WASHER, FLAT, 16.5 X 26 X 2
15	HM-61290	HEX, BOLT, 12 X 90, G8.8
16	NM-31205	NUT, NYLOCK, 12mm, G8.8
17	HM-510130	HEX, BOLT, 10 X 130, G10.9
18	NM-21015	NUT, NYLOCK, 10mm, G8.8
19	NM-1812	NUT, NYLOCK, 8mm, G8.8
20	HM-2865	HEX, BOLT, 8 X 65, G8.8
21	NM-51601	NUT, HEX, 16mm, G8.8
22	900083.A	FLAT PRESS WHEEL
23	900262	HILLER DISC ASM 8"
24	KD11845	CAP DUST COVER DISC
25	W-5410	WASHER, FLAT, 5/8" SAE G8
26	HM-81645	HEX, BOLT, 16 X 45, G8.8
27	NM-51605	NUT, NYLOCK, 16mm, G8.8

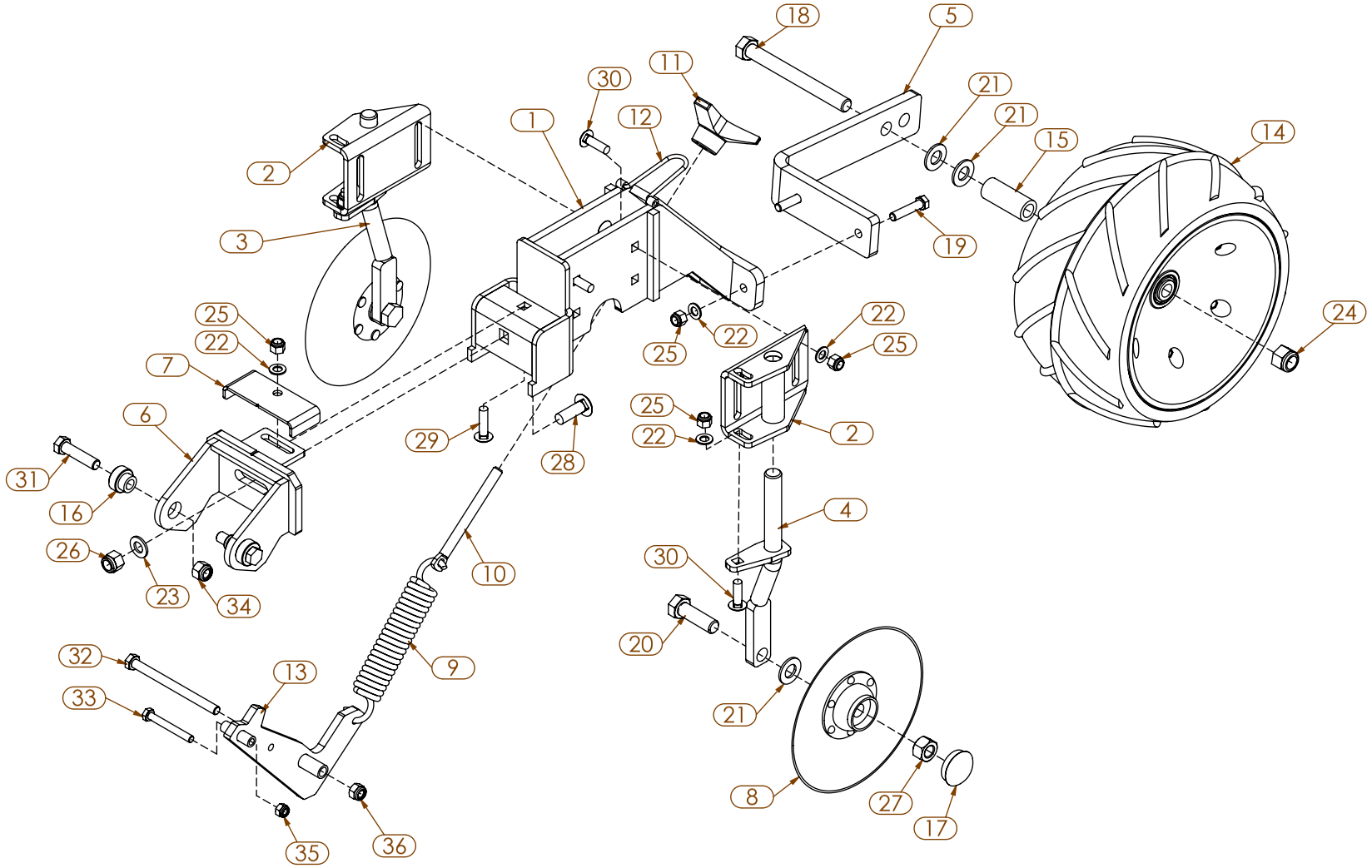
18
5
11
30
21
21
12
1
15
14
2
3
19
24
25
22
22
25
22
25
7
25
22
2
6
29
28
31
16
4
26
23
34
10
30
20
32
13
9
33
21
8
27
17
35
36

ITEM	PART NUMBER	DESCRIPTION
1	200061	BODY WA
2	200062	DISC ADJUSTMENT WA
3	200063	DISC WHEEL ADJUSTMENT R WA
4	200064	DISC WHEEL ADJUSTMENT L WA
5	800772	ANGLE
6	800582	FRONT BRACKET WA
7	800784	TOP COVER
8	300004	8" DISC
9	7075	SPRING
10	7071.2	ADJUSTMENT ROD, 12 X 130mm
11	7082	KNOB
12	7078	WIRE STOP
13	200001	SPRING PLATE WA
14	900083.A	FLAT PRESS WHEEL
15	800777	BUSHING, 1.000 X .641 X 2.438
16	800474.1	BUSHING, SHORT
17	300996	DUST CAP
18	H-5601	BOLT, HEX, 5/8"-11 X 6" G8
19	H-3130	BOLT, HEX, 3/8"-16 X 1-3/4" G8
20	H-5201	BOLT, HEX, 5/8"-11 X 2" G8
21	W-5410	WASHER, FLAT, 5/8" SAE G8
22	W-2410	WASHER, FLAT, 3/8" SAE G8
23	W-4410	WASHER, FLAT, 1/2" SAE G8
24	N-5101	NUT, NYLOCK, 5/8"-11 G8
25	N-2101	NUT, NYLOCK 3/8"-16 G8
26	N-4101	NUT, NYLOCK 1/2"-13 G8
27	N-5301	NUT, HEX, CL, 5/8"-11
28	CB-4411	BOLT, CARR., 1/2"-13 X 1.50, G5
29	CB-2221	BOLT, CARR., 3/8"-16 X 1.50, G5
30	CB-2214	BOLT, CARR., 3/8"-16 X 1.25, G5
31	HM-61250	HEX, BOLT, 12 X 50, G10.9
32	HM-510130	HEX, BOLT, 10 X 130, G10.9
33	HM-2865	HEX, BOLT, 8 X 65, G8.8
34	NM-31205	NUT, NYLOCK, 12mm, G8.8
35	NM-1812	NUT, NYLOCK, 8mm, G8.8
36	NM-21015	NUT, NYLOCK, 10mm, G8.8

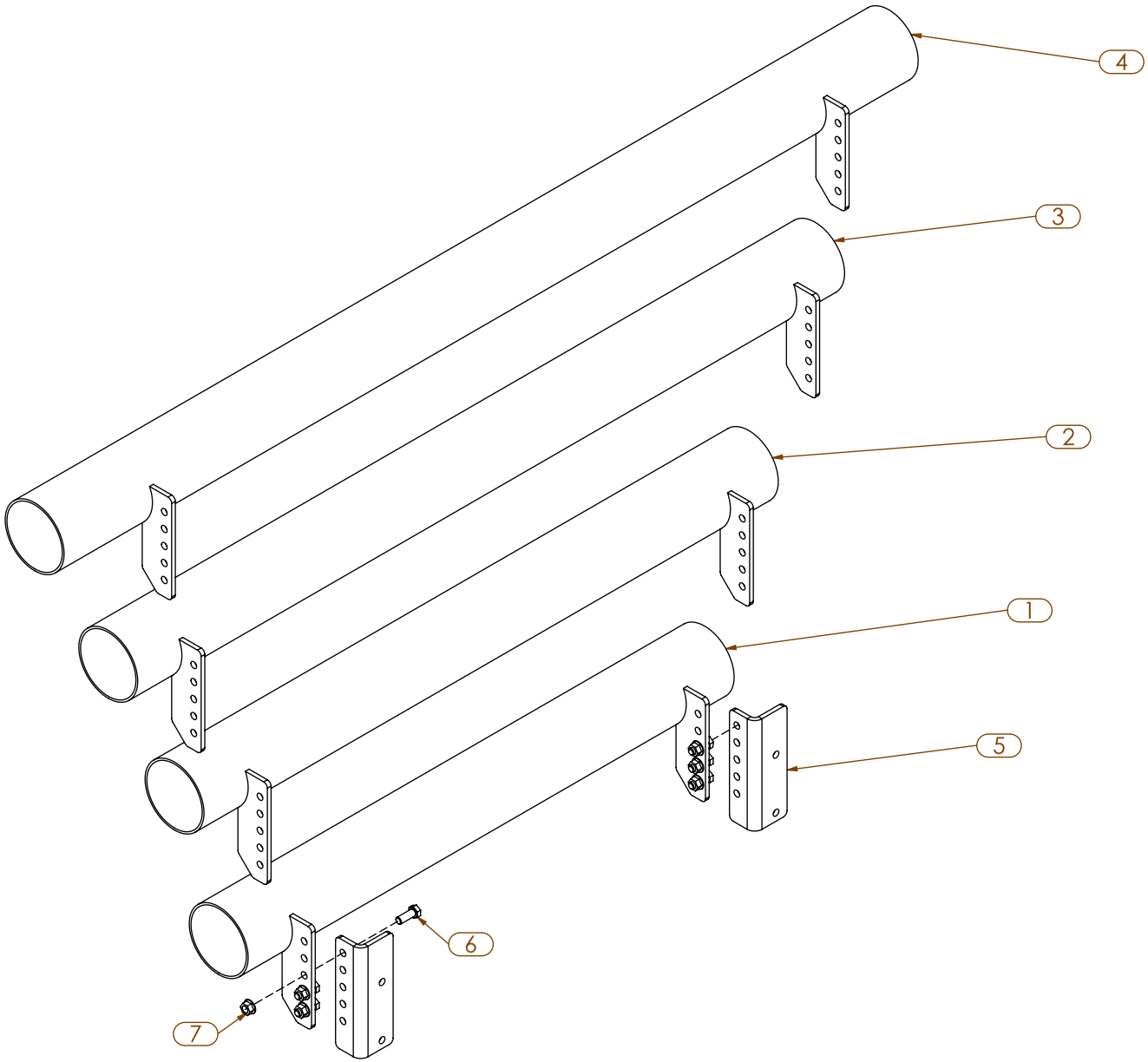
4
3
2
1
5
6
7

ITEM	PART NUMBER	DESCRIPTION
1	200399	BAZOOKA TUBE 33" LONG
2	200412	BAZOOKA TUBE 39" LONG
3	200398	BAZOOKA TUBE 48" LONG
4	200731	BAZOOKA TUBE 58" LONG 16 ROW FRAME
5	800201	TOP ARM CLAMP
6	H-3100	BOLT, HEX, 3/8"-16 X 1" G8
7	N-2301	NUT, SER. FLANGE, 3/8"-16

ROW MARKER, 5X5 XTRA-SMALL (2 ROWS)

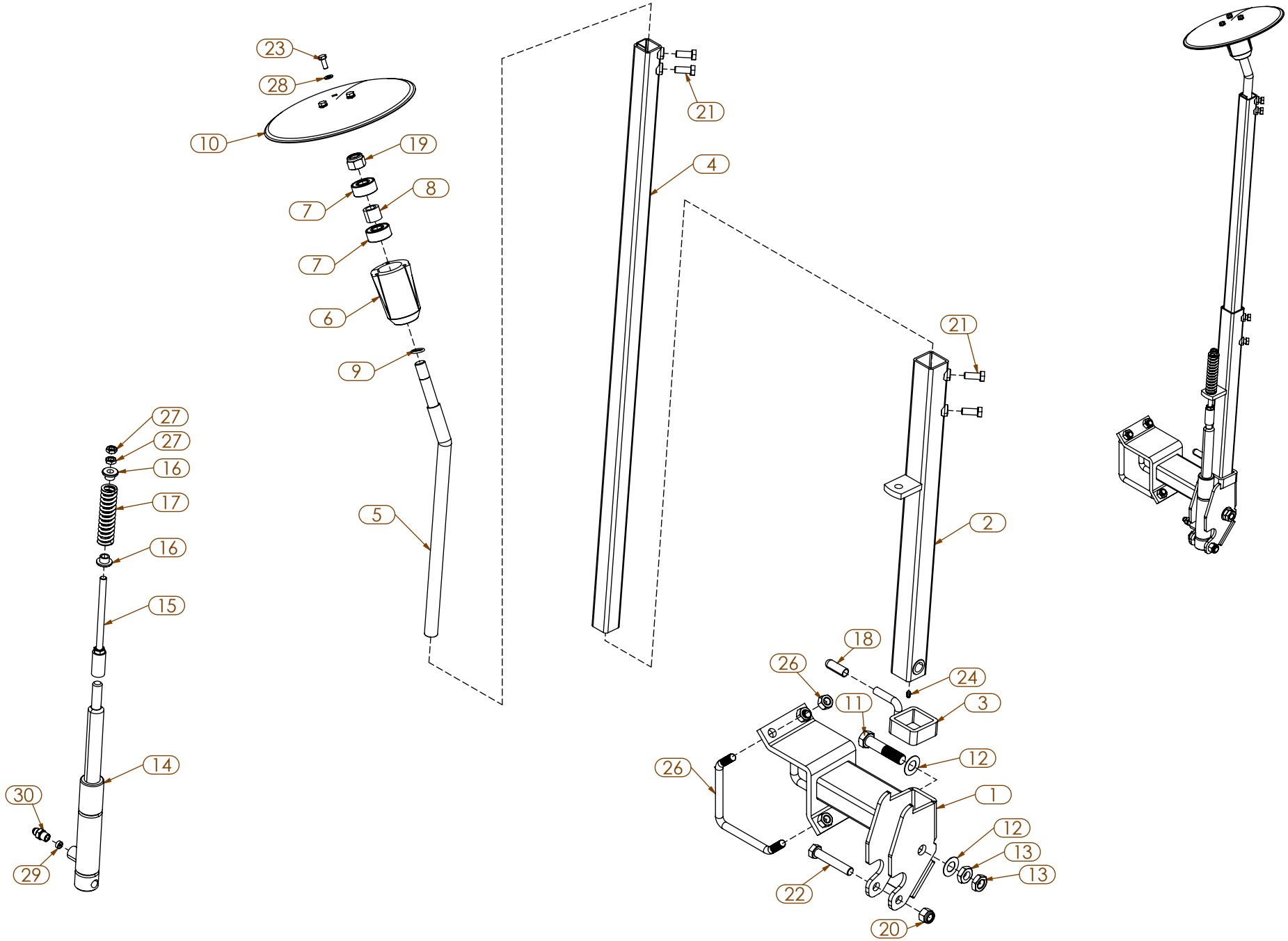

ITEM	PART NUMBER	DESCRIPTION
1	4269.D	MARKER MOUNT, RIGHT
	4269.G	MARKER MOUNT, LEFT (NOT SHOWN)
2	65241071	MARKER ARM, LOWER
3	65107039	LOCKING WEDGE
4	4956.1	TUBE, 40X40 LENGTH 51"
5	4957	SHAFT
6	4555.1	HUB, ROW MARKER
7	7014.A	BEARING- (5204-2RS)
8	4472	BUSHING, 20 x 30 x 24L mm
9	4556	O-RING
10	11207	DISC, 12IN, ROW MARKER
11	30513076	BOLT, M20 X 90
12	10623026	WASHER, 21 X 40 X 1
13	30601020	NUT, JAM, M20
14	4566	HYD CYLINDER, SA, 30-30 150X150
15	4567	CYLINDER NUT ROD
16	1339	BUSHING
17	11206	SPRING, 121.7L x20IDmm
18	10200222	RUBBER CAP, RED
19	NM-72005	NUT, NYLOCK, 20mm, G8.8
20	NM-51605	NUT, NYLOCK, 16mm, G8.8
21	HM-61230	HEX, BOLT, 12 X 30, G8.8
22	HM-81690	HEX, BOLT, 16 X 90, G8.8
23	HM-2820	HEX, BOLT, 8 X 20, G8.8
24	10118	GREASE ZERK, 6mm
26	4501.SA	V-BOLT, 5 X 5 X 5/8"-11
26	N-5001	NUT, HEX, 5/8"-11, G8
27	NM-31203	NUT, HEX, JAM, 12mm, G8.8
28	10620064	WASHER, FLAT, 8.5 X 16 X 2mm
29	4589	FLOW REDUCER, NON ADJUSTABLE
30	TA2404-6-6	3/8 MALE JIC - 3/8 MALE NPT

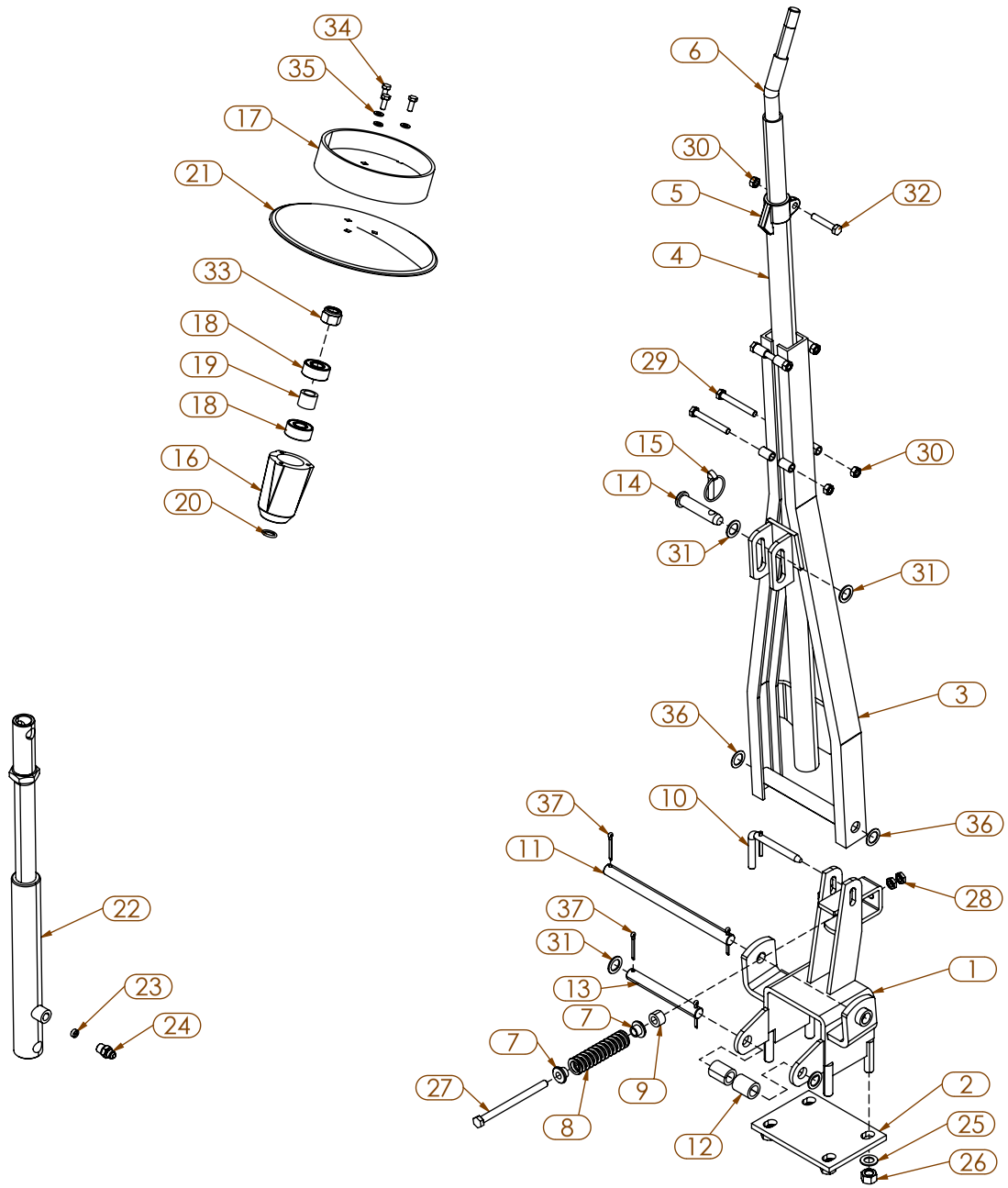
34
35
17
21
33
18
19
18
16
20
6
30
5
32
4
29
15
30
14
31
31
3
36
10
36
37
11
28
37
31
1
13
7
7
27
9
2
8
12
25
26
22
23
24

ITEM	PART NUMBER	DESCRIPTION
1	4550	MOUNTING BRACKET, SHORT MARKER
2	4551	PLATE, MARKER MOUNT
3	4552.1	SUPPORT FRAME, SHORT, 105CM
4	4553.1	FEMALE TUBE 200cm (78 3/4")
	4553.2	FEMALE TUBE 120cm (47 1/4")
	4553.3	FEMALE TUBE 100cm (39 3/8")
5	4361	ADJUSTABLE CLAMP
6	4554.1a	MALE TUBE 180cm (70 7/8")
	4554.2a	MALE TUBE 100cm (39 7/8")
7	1339	BUSHING
8	11206	SPRING, 121.7L x20IDmm
9	20016450	BUSHING, 15mm
10	11539	ROW MARKER PIN
11	4557	PIVOT PIN, 302mm
12	4560	BUSHING (B11)
13	4558	CYLINDER PIN
14	11482	PIN, 19MM X 65MM
15	11476	LYNCHPIN, 9MM DIA. X 2"
16	4555.1	HUB, ROW MARKER
17	11214	DISC CROWN
18	7014.A	BEARING- (5204-2RS)
19	4472	BUSHING, 20 x 30 x 24L mm
20	4556	O-RING
21	11207	DISC, 12IN, ROW MARKER
22	4559	HYD CYLINDER, 35x220mm
23	4589	FLOW REDUCER, NON ADJUSTABLE
24	TA2404-6-6	3/8 MALE JIC - 3/8 MALE NPT
25	10622044	WASHER, 17 X 30 X 2mm
26	NM-51601	NUT, HEX, 16mm, G8.8
27	HM-56160	HEX, BOLT, 12 X 160, G8.8
28	NM-31203	NUT, HEX, JAM, 12mm, G8.8
29	HM-41080	HEX, BOLT, 10 X 80, G8.8
30	NM-21011	NUT, HEX, 10mm, G8.8

ITEM	PART NUMBER	DESCRIPTION
31	10623011	WASHER, 21x32x2mm
32	HM-41055	HEX, BOLT, 10 X 55, G8.8
33	NM-72005	NUT, NYLOCK, 20mm, G8.8
34	HM-2820	HEX, BOLT, 8 X 20, G8.8
35	10620064	WASHER, FLAT, 8.5 X 16 X 2mm
36	10623009	WASHER, 21 x 32 x 1mm
37	10170067	SPLIT PIN, 5 x 40mm

ROW MARKER, 5x5 MEDIUM (6-8 ROWS)

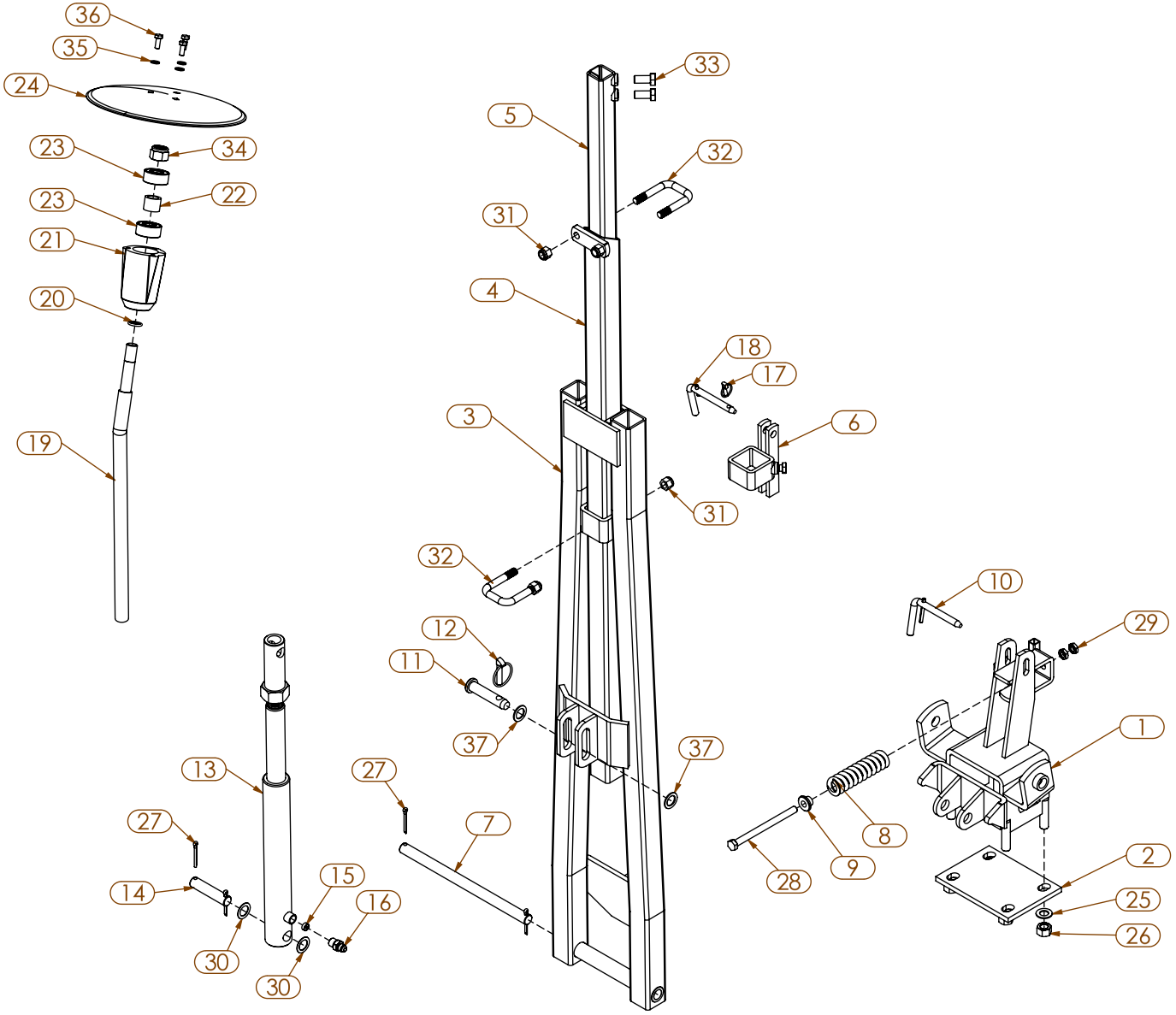

ITEM	PART NUMBER	DESCRIPTION
1	4959	MOUNTING BRACKET, 5x5 MEDIUM MARKER
2	4551	PLATE, MARKER MOUNT
3	4954	MAIN FRAME, 51"
4	4955.1	TUBE, 50X50, LENGTH 49"
5	4956.1	TUBE, 40X40 LENGTH 51"
6	4958	RETRACTABLE COLLAR
7	4557.1	PIN
8	4960	SPRING
9	1339	BUSHING
10	11539	ROW MARKER PIN
11	11482	PIN, 19MM X 65MM
12	11476	LYNCHPIN, 9MM DIA. X 2"
13	4559.AM	HYD CYLINDER, 35x220
14	4961	PIN
15	4589	FLOW REDUCER, NON ADJUSTABLE
16	TA2404-6-6	3/8 MALE JIC - 3/8 MALE NPT
17	300594	LYNCH PIN
18	11539.1	ADJUSTING PIN
19	4957	SHAFT
20	4556	O-RING
21	4555.1	HUB, ROW MARKER
22	4472	BUSHING, 20 x 30 x 24L mm
23	7014.A	BEARING- (5204-2RS)
24	11207	DISC, 12IN, ROW MARKER
25	10622044	WASHER, 17 X 30 X 2mm
26	NM-51601	NUT, HEX, 16mm, G8.8
27	10170067	SPLIT PIN, 5 x 40mm
28	HM-56160	HEX, BOLT, 12 X 160, G8.8
29	NM-31203	NUT, HEX, JAM, 12mm, G8.8
30	10623009	WASHER, 21 x 32 x 1mm

ITEM	PART NUMBER	DESCRIPTION
31	N-4101	NUT, NYLOCK 1/2"-13 G8
32	KD2721	U-BOLT, 2 X 2 X 1/2"-13
33	HM-71430	HEX, BOLT, 14 X 30, G8.8
34	NM-72005	NUT, NYLOCK, 20mm, G8.8
35	10620064	WASHER, FLAT, 8.5 X 16 X 2mm
36	HM-2820	HEX, BOLT, 8 X 20, G8.8
37	10623011	WASHER, 21x32x2mm

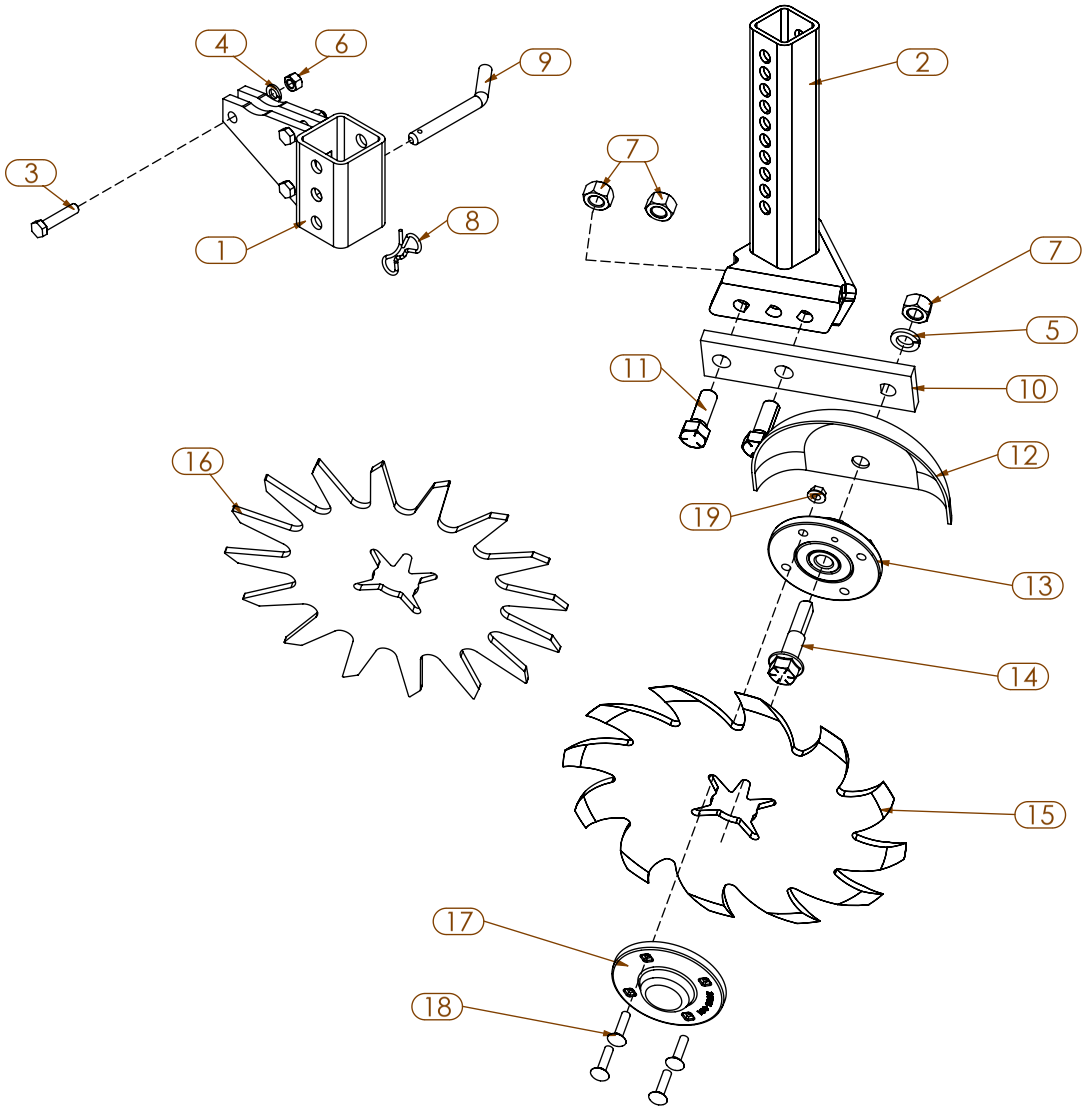
4
6
9
2
3
7
8
1
7
5
11
10
12
16
19
13
14
15
17
18

ITEM	PART NUMBER	DESCRIPTION
1	201024	RESIDUE MOUNTING BRACKET
2	Y2967-200	RESIDUE MANAGER STEM
3	H-3130	BOLT, HEX, 3/8"-16 X 1-3/4" G8
4	W-2610	WASHER, SPLIT, 3/8", G8
5	W-5610	WASHER, SPLIT, 5/8", G8
6	N-2001	NUT, HEX, 3/8"-16, G8
7	N-5001	NUT, HEX, 5/8"-11, G8
8	Y2570-448	1/8 HAIRPIN ZP
9	Y2965-305	PIN, DEPTH ADJUST RES MGR
10	Y2967-076	SGL WHL R.M. STRAP
11	Y2570-743	BOLT, HEX, 5/8-11_1.75_FLATSIDE
12	Y2967-392	SHIELD
13	Y2965-128	HUB W/ BEARING COMPLETE
14	Y2570-740	BOLT, HEX FLANGE HEAD, 5/8-11X 3, FLATSIDE
15	Y2967-602	WHEEL, SHARKTOOTH
16	Y2967-404	WHEEL, SPIKE
17	Y2965-352	HUB CAP, CAST
18	CB-1150	BOLT, CARR, 5/16-18 X 1 1/2" GR5
19	N-1110	NUT, SER. FLANGE, 5/16"-18

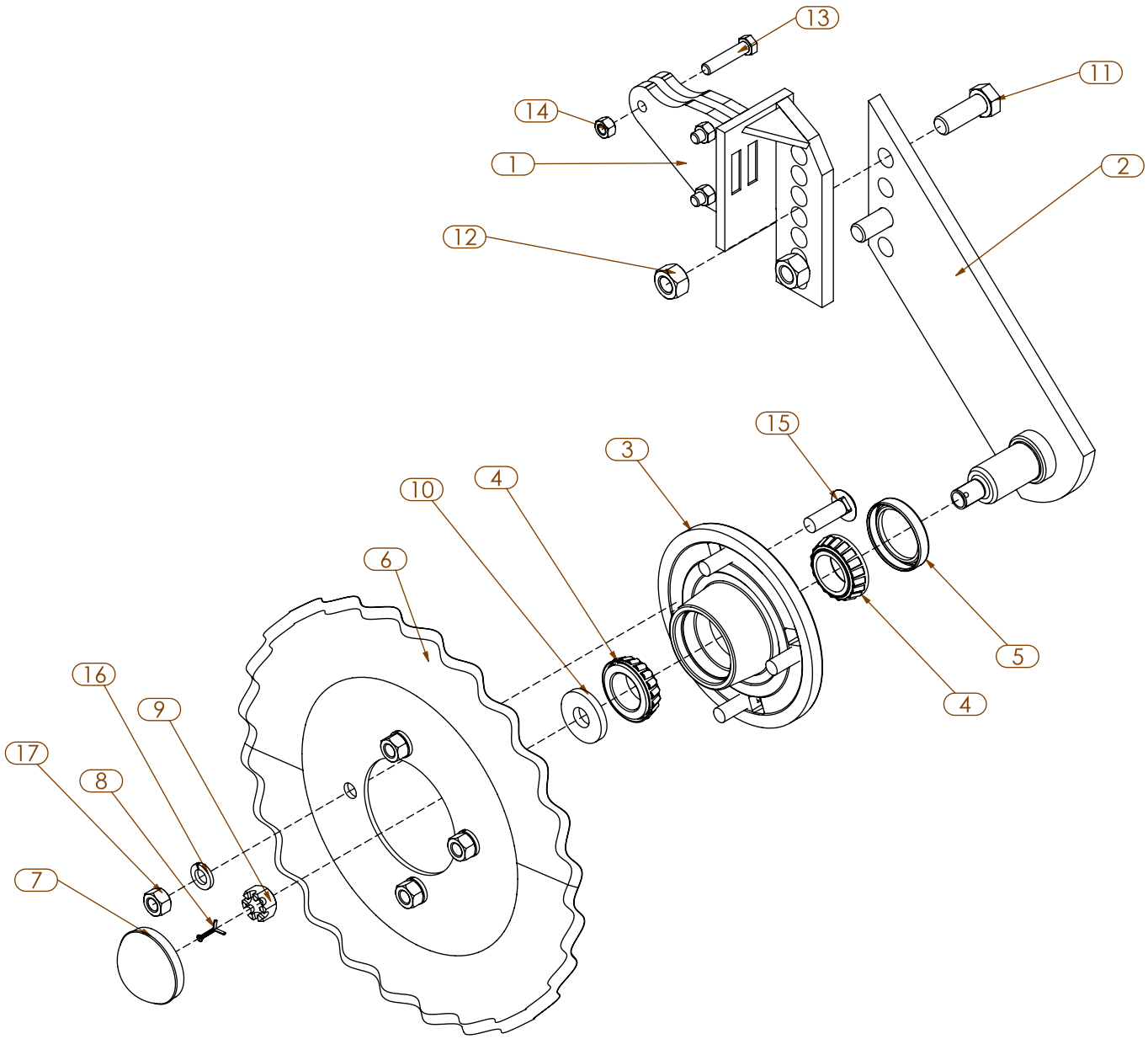
13
11
14
1
2
12
15
3
4
10
6
5
4
16
9
17
8
7

ITEM	PART NUMBER	DESCRIPTION
1	200340	COULTER MOUNT WA
2	L527-100	COULTER ARM
3	Y2900-102	HUB ASM
4	Y2550-027	CONE
5	Y2550-115	SEAL
6	Y2571-166	NO-TILL COULTER
7	Y2570-375	HUB CAP
8	Y2531-102	COTTER PIN, 1/8" X 1-1/4"
9	N-5502	NUT, HEX, SLOTTED, 5/8"-18
10	Y2526-449	WASHER, FLAT, 5/8", 1/4" THICK
11	H-5130	BOLT, HEX, 5/8"-11 X 1-3/4" G8
12	N-5301	NUT, HEX, CL, 5/8"-11
13	H-3130	BOLT, HEX, 3/8"-16 X 1-3/4" G8
14	N-2300	NUT, HEX, CL, 3/8"-16
15	CB-4411	BOLT, CARR., 1/2"-13 X 1.50, G5
16	W-4610	WASHER, SPLIT, 1/2", G8
17	N-4001	NUT, HEX, 1/2"-13, G8

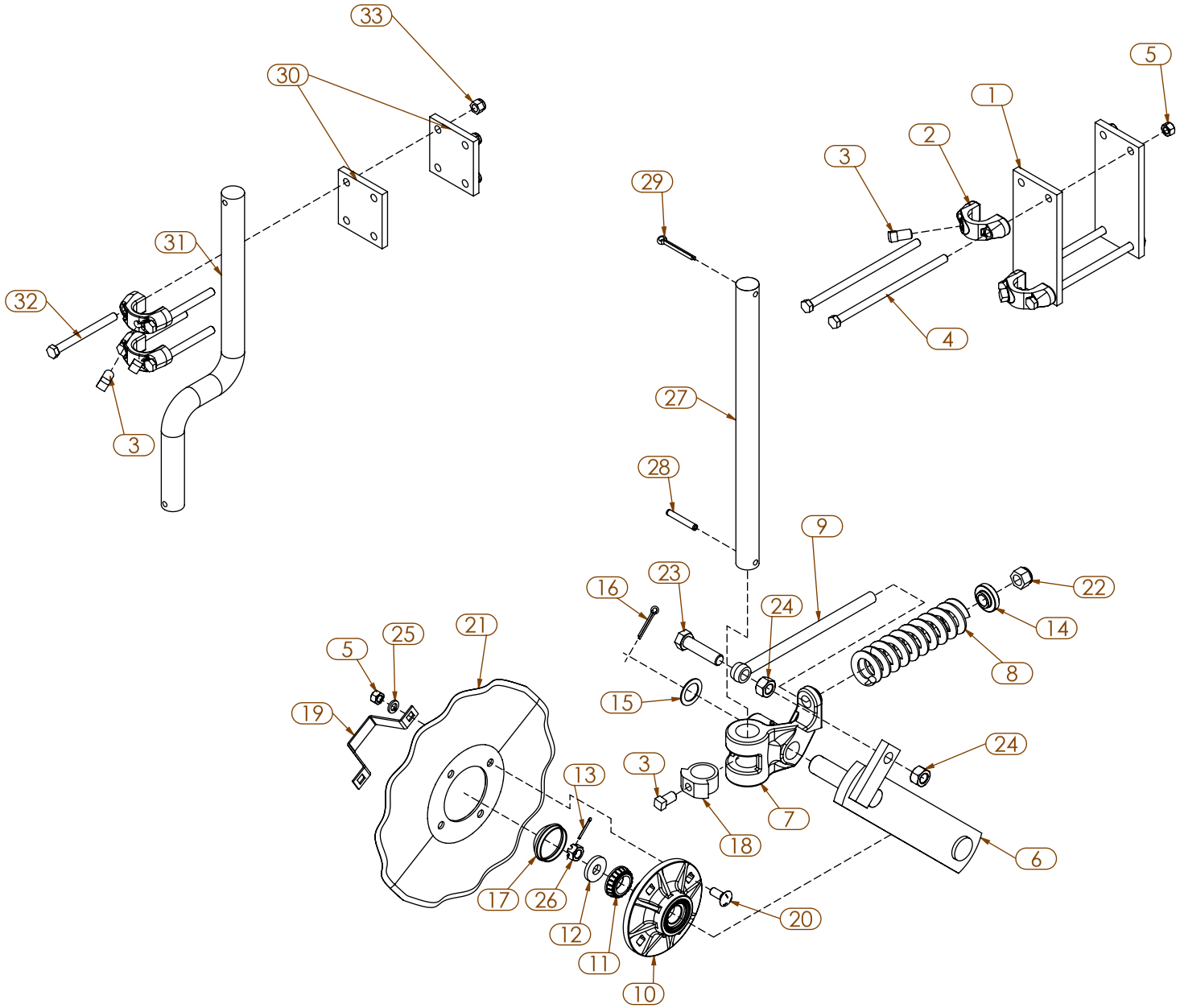
33
30
31
32
3
29
27
28
5
1
2
3
4
9
23
16
24
22
14
8
21
25
5
19
15
24
3
13
7
18
6
17
26
12
11
10
20

ITEM	PART NUMBER	DESCRIPTION
1	Y2990-315	CLAMP PLATE
2	Y2990-360	CLAMP CASTING
3	2503-379	5/8-11 X 1 SQ HEAD, SET SCREW
4	H-4905	BOLT, HEX, 1/2"-13 X 10", AT, G5
5	N-4001	NUT, HEX, 1/2"-13, G8
6	2910-207	COULTER ARM WA
7	2910-320	PIVOT CASTING
8	2550-774	SPRING, COMPRESSION
9	2570-124	3/4 EYEBOLT, 3/4 EYE, 12"
10	2900-102	HUB ASM
11	2550-027	CONE, LM67048
12	2526-449	WASHER, 5/8" ID X 1 3/4" OD X 1/4"
13	2531-102	SPLIT PIN,
14	2555-112	SPRING BUSHING
15	2526-561	MACHINE BUSHING, 1.26 X 1.87 X .07
16	2531-125	1/4 X 1-3/4 COTTER PIN
17	2570-375	CAP
18	2910-301	LOCKING COLLAR PLOW COULTER
19	2987-301	RETAINER
20	2505-337	1/2-13 X 1 1/4 CAR BOLT GR5
21	Y2571-162	COULTER BLADE, 16", 13 WAVE
22	N-6101	NUT, NYLOCK 3/4"-10 G8
23	H-6301	BOLT, HEX, 3/4"-10 X 3" G8
24	N-6001	NUT, HEX, 3/4"-10, G8
25	W-4610	WASHER, SPLIT, 1/2", G8
26	N-5502	NUT, HEX, SLOTTED, 5/8"-18
27	Y3010-303	SHANK, 22"
28	2530-208	3/8 X 2 1/2 ROLL PIN
29	2531-161	5/16 X 2 1/2 COTTER PIN
30	2990-313	PLATE, MOUNT FOR 2.5" BAR
31	Y3011-302	OFFSET SHANK
32	H-4520	BOLT, HEX, 1/2"-13 X 5-1/2" G8
33	N-4101	NUT, NYLOCK 1/2"-13 G8

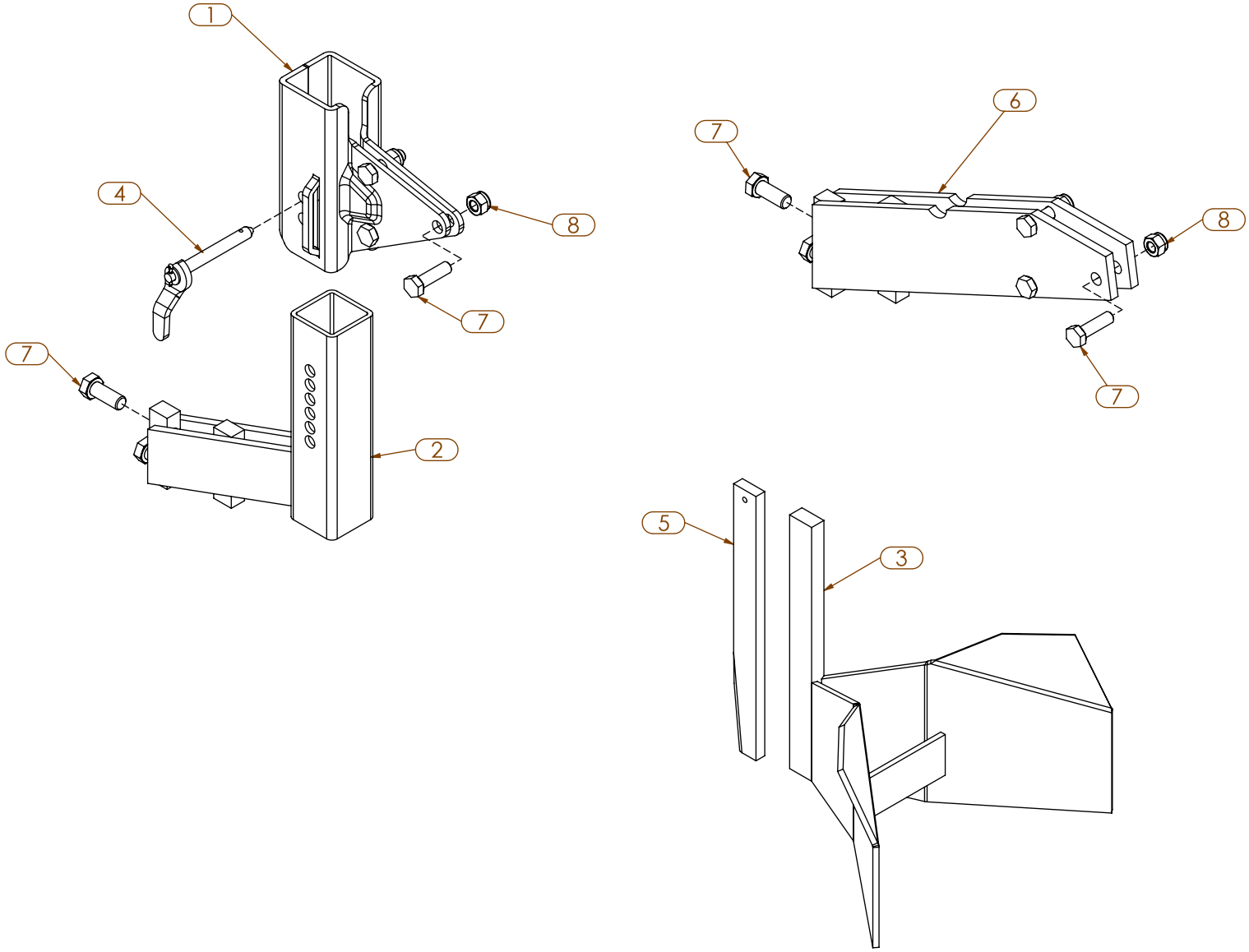
1
4
8
7
7
2
6
7
8
7
5
3

ITEM	PART NUMBER	DESCRIPTION
1	66005863	CLOD REMOVER BRACKET
2	66005252	TRASH WHEEL BRACKET
3	7103.a	CLOD REMOVER WINGS
4	65034059	LOCKING LEVER
5	7101	FRONT POINT, CLOD REMOVER
6	7102.A	MOUNTING BRACKET, CLOD REMOVER
7	HM-41035	HEX, BOLT, 10 X 35, G8.8
8	NM-21015	NUT, NYLOCK, 10mm, G8.8

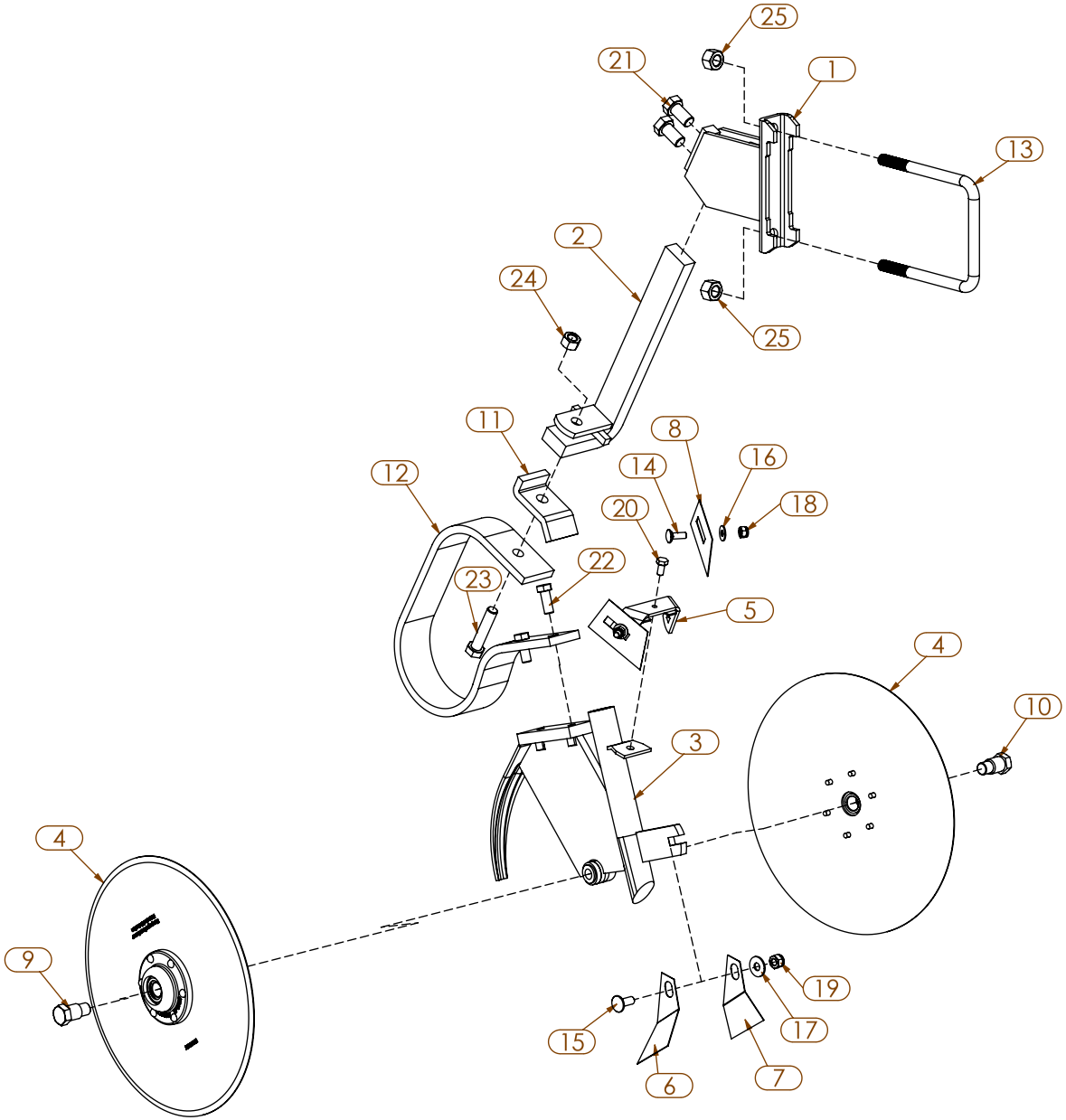
25
21
1
13
2
24
25
11
8
16
12
14
18
20
22
23
5
4
10
3
4
9
19
15
17
6
7

ITEM	PART NUMBER	DESCRIPTION
1	9183	CLAMP FOR DISC ASSEMBLY
2	9182	FERTILIZER SPRING BRACKET
3	9180.B	FERTILIZER FRONT BRACKET
4	7009.1A	DISC COMPLETE 350mm
5	7017.B	OUTSIDE SCRAPER BRACKET
6	7016.G	LEFT SCRAPER, INSIDE
7	7016.D	RIGHT SCRAPER, INSIDE
8	7018.A	OUTSIDE SCRAPER
9	7012.GA	SPINDLE, LT, 16mm, 1.5 PITCH
10	7012.DA	SPINDLE, RT, 16mm, 1.5 PITCH
11	20018590	STOP PLATE (UPPER POSITION)
12	9181	SPRING TINE, 55 x 11
13	4502	U-BOLT, 5 X 5 X 16mm
14	30561055	CARR. BOLT, 8 X 22mm, CL8.8
15	CBM-31025	CARR. BOLT, 10 X 25mm, CL8.8
16	10620069	WASHER, 8.5 X 20 X 1.5
17	10620095	WASHER, 10.5 X 27 X 2
18	NM-1812	NUT, NYLOCK, 8mm, G8.8
19	NM-21015	NUT, NYLOCK, 10mm, G8.8
20	HM-2816	HEX, BOLT, 8 X 16, G8.8
21	HM-81630	HEX, BOLT, 16 X 30, G8.8
22	HM-61230	HEX, BOLT, 12 X 30, G8.8
23	HM-71465	HEX, BOLT, 14 X 65, G8.8
24	NM-41201	NUT, HEX 14mm, G8.8
25	NM-51601	NUT, HEX, 16mm, G8.8

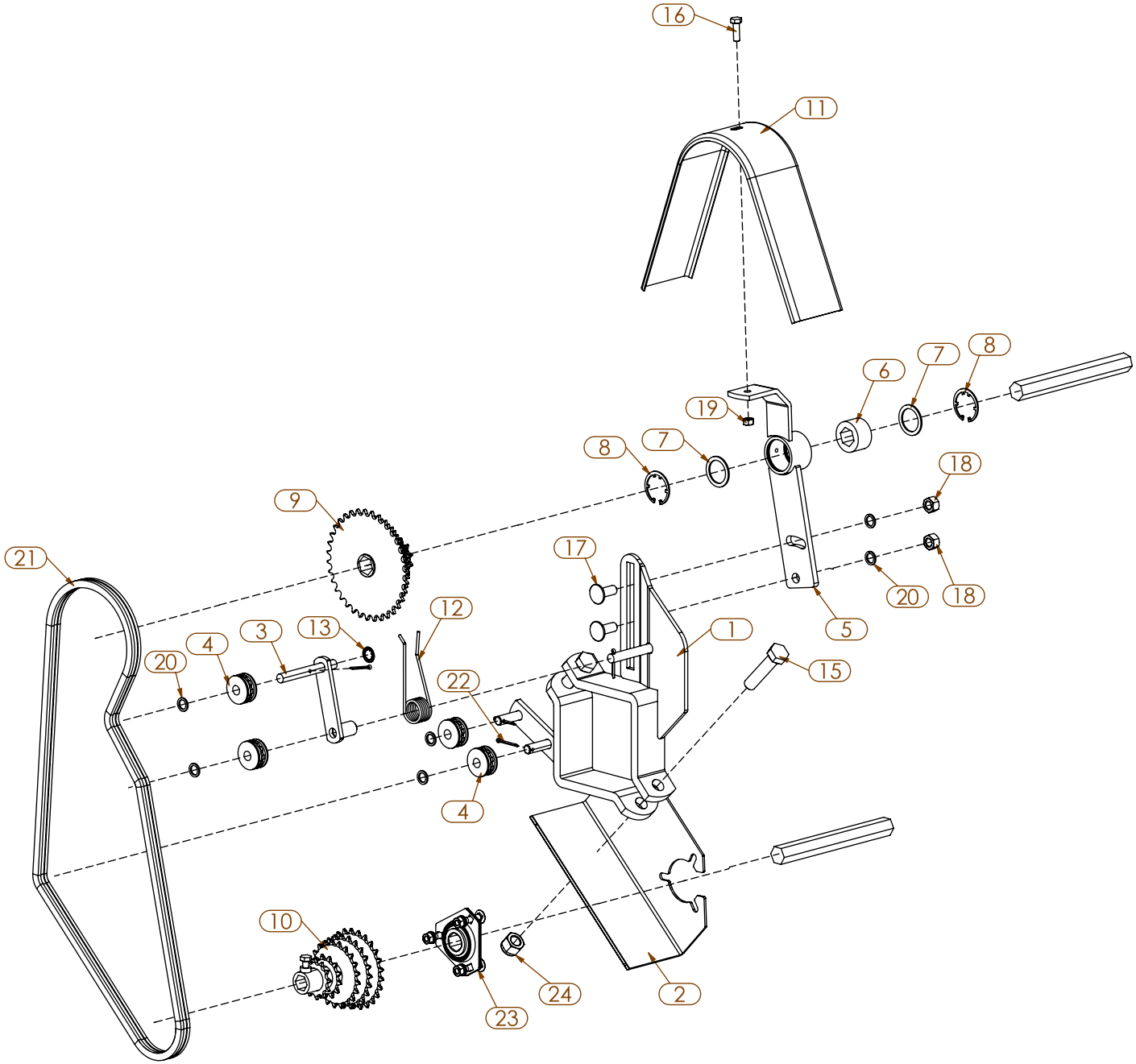
16
11
8
7
6
19
8
7
18
9
17
21
20
18
5
12
13
3
4
1
20
15
22
4
10
24
2
23

ITEM	PART NUMBER	DESCRIPTION
1	66005491	DRIVE BRACKET CLAMP
2	9170.A	LOWER HOUSING W/ CLAMP
3	9179	CHAIN TIGHTENER BRACKET
4	9562	CHAIN ROLLER
5	66005931	UPPER DRIVE SUPPORT
6	9280.A	SUPPORT BUSHING DRIVE HEX
7	10624016	WASHER - 31 X 41 X 2 MM
8	4329.A	SNAP RING
9	9171.C	SPROCKET CLUSTER (12, 16, 19, 22, 30, 35T), 5R
10	9555.2	SPROCKET CLUSTER (12, 13, 21, 23, 25T), 5R
11	9184	CHAIN GUARD
12	9174	SPRING
13	5654	WASHER, LOCK, 12MM INTERNAL TOOTH
14	10118	GREASE ZERK, 6mm
15	HM-81670	HEX, BOLT, 16 X 70, G8.8
16	HM-2825	HEX, BOLT, 8 X 25, G8.8
17	CBM-41230	CARR. BOLT, 12 X 30mm, CL8.8
18	NM-31201	NUT, HEX, 12mm, G8.8
19	NM-1801	NUT, HEX, 8mm, G8.8
20	10621026	WASHER, 13 X 18 X 2 MM
21	9172.B	DRY FERT DRIVE CHAIN
22	10170031	SPLIT PIN, 3.5 X 25mm
23	180039	BEARING, COMPLETE w/ FLANGE
24	NM-51605	NUT, NYLOCK, 16mm, G8.8

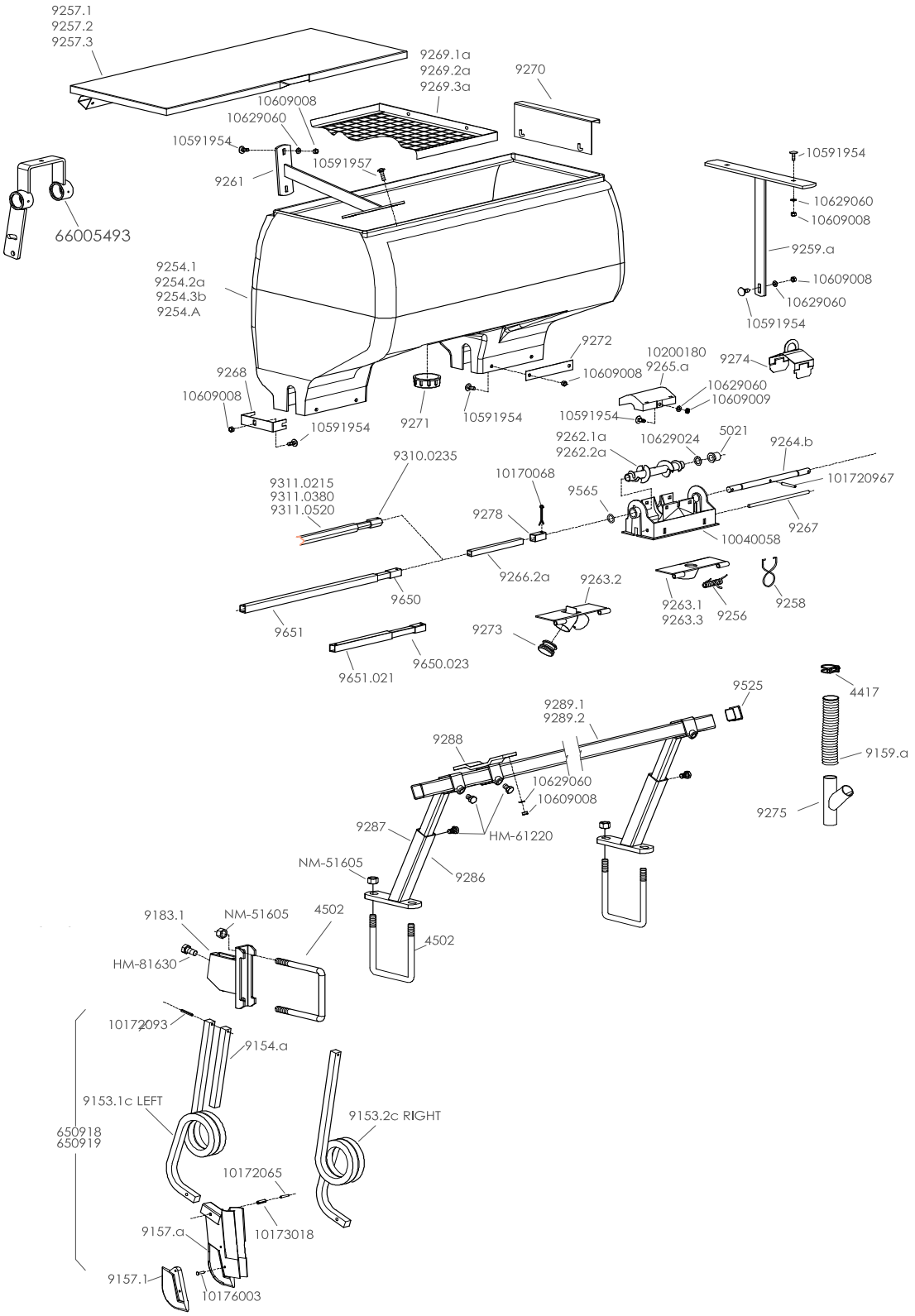
9257.1
9257.2
9257.3
9269.1a
9269.2a
9269.3a
9270
10609008
10629060
10591954
10591957
9261
66005493
10591954
10629060
10609008
9259.a
10609008
10629060
10591954
9254.1
9254.2a
9254.3b
9254.A
9272
10200180
9265.a
9274
10609008
10629060
10609009
9268
10609008
9271
10591954
10591954
10591954
9262.1a
9262.2a
10629024
5021
9264.b
9310.0235
10170068
101720967
9311.0215
9311.0380
9311.0520
9565
9278
9267
10040058
9266.2a
9263.2
9650
9263.1
9263.3
9256
9258
9651
9273
9650.023
9651.021
9525
4417
9289.1
9289.2
9288
9159.a
10629060
10609008
9275
9287
HM-61220
NM-51605
9286
9183.1
NM-51605
4502
4502
HM-81630
10172093
9154.a
9153.1c LEFT
9153.2c RIGHT
650918
650919
10172065
9157.a
10173018
9157.1
10176003

PART No.	DESCRIPTION
4329.a	Snap ring, internal
4502	U bolt, 16mm
4515	Bearing complete with flangettes
4515.1	Bearing only (205KRRB2)
4515.2	Flangettes (2)
4520	7/8" HEX SHAFT
5021	Bushing (self lubricated)
7009	Disc only
7009.1a	Disc complete w/hub & bearing
7010.a	Hub only (mounts with 6x20 bolts)
7012.ga	Lefthand spindle
7012.da	Righthand spindle
7014.a	Bearing
7015.a	Sealing washer
7016.d	Right scraper, inside
7016.g	Left scraper, inside
7017.b	Bracket, for outside scrapers
7018.a	Outside scraper
9153.1c	Tine offset to the left
9153.2c	Tine offset to the right
9154.a	Reinforcement bar
9157.a	Fertilizer knife w/point
9157.1	Replacement cast point (5x34 rivets)
9169.a	Support bracket
9170.a	Clamp bracket
9171.b	Upper sprocket cluster (12-16-19-22-30-35)
9172.b	Chain, 5R (108 links w/conn link)
9173.a	Support bracket for drive shaft (single bushing)
9173.1	Support bracket (double bushing)
9174	Spring
9179	Chain tightener bracket
9180.b	Main housing for assembly
9181	Spring support for discs
9182	Mounting bar
9183	Clamp for disc assembly
9183.1	Clamp for knife assembly
9184	Shield
9254.1	Fertilizer hopper, 1 outlet, 225 lb capacity
9254.2a	Fertilizer hopper, 2 outlet, 400 lb capacity
9254.3a	Fertilizer hopper, 3 outlet (625 lb capacity)
9255	Meter housing, aluminum
9255.asy	Meter assy complete, with High output auger
9256	Spring, trap door
9257.1	Metal lid for 1 outlet hopper
9257.2	Metal lid for 2 outlet hopper
9257.3	Metal lid for 3 outlet hopper
9258	Hose clamp
9259.a	Support, inside 3-row hopper
9261	Support inside hopper
9262.1a	Standard auger (blue)

PART No.	DESCRIPTION
9262.2	High output auger (red)
9262.2a	High output auger (red) w/small ends
9263.1	Trap door - 1 outlet
9263.2	Trap door - 2 outlet
9264.b	Spindle, meter assembly
9265	Auger cover, (9" wide)
9265.a	Auger cover, (4 3/4" wide)
9266.1	Telescoping drive shaft between meters
9266.2	Drive shaft between meters
9267	Hinge for trap door
9268	Hopper reinforce strap (8x18 carriage bolt)
9269.1a	Sieve for 1 outlet hopper
9269.2a	Sieve for 2 outlet hopper
9269.3a	Sieve for 3 outlet hopper
9270	Sieve hanger bracket
9271	Plastic cap
9272	Hopper reinforce strap (8x18 carriage bolt)
9273	Plastic plug for outlet on trap door
9274	COVER SHIELD CLIP
9280	Bushing (square hole) supports drive shaft
9286	Fixed mounting bracket
9287	Adjustable mounting bracket
9288	Hopper support bracket
9289.1	Support bar (1'4")
9289.2	Support bar (2' 10")
9289.3	Support bar (4' 6")
9310.0235	Drive shaft, hex (inner) (.235cm)
9311.0215	Drive shaft, hex (outer) (.215cm)
9311.038	Drive shaft, hex (outer) (.38cm)
9311.052	Drive shaft, hex, (outer) (.52cm)
9525	End cap
9555.a	Lower sprocket cluster (12-25)
9555.2	Lower sprocket cluster (12-13-21-23-25)
9562	Chain idler roller
CBM-41230	M12 X 30MM CAR BOLT CL8.8 ZNC
F38706	Bolt, 12x30
F40179	Nylon locknut, 16mm
10170068	Cotter pin, 5x45
10172065	Roll pin, 5x30
10172093	Roll pin, 6x40
10173018	Roll pin, 8x30
10176003	Rivet, 5x34 countersunk head
10500094	Bolt, 6x20 (mount disc to hub)
10508007	Bolt, 16x30
10561053	Carriage bolt 8x18mm
10562016	Carriage bolt 10x25
10621024	Washer, 13x18x2
10624014	Washer, 31x41x1
30170066	
66005491	Support bracket
66005493	
66005931	SPEC UPPER SUPPORT BRKT

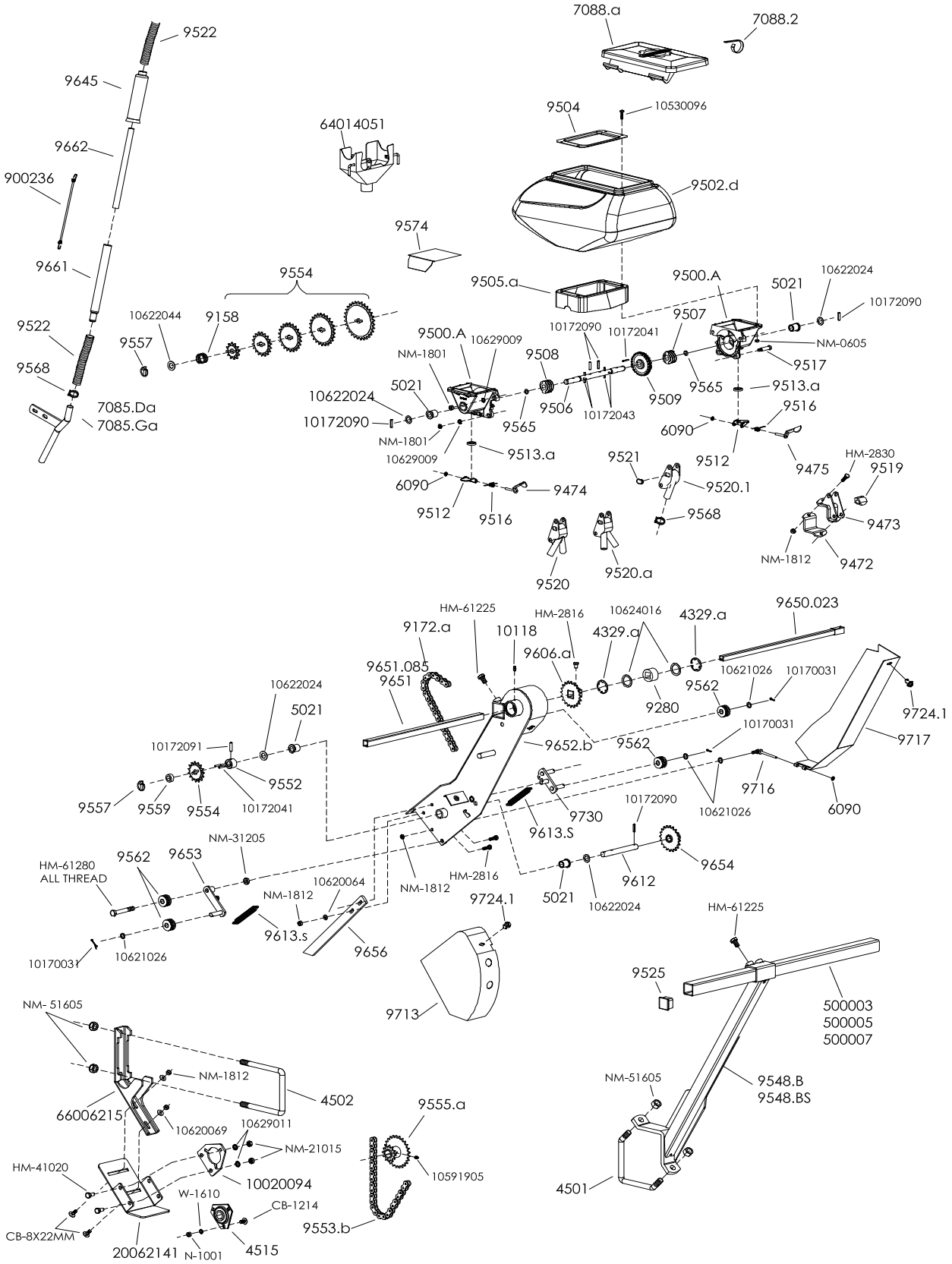
9522
9645
9662
900236
9661
9522
9568
7085.Da
7085.Ga
64014051
9574
9554
10622044
9158
9557
7088.a
7088.2
9504
10530096
9502.d
9505.a
9500.A
5021
10622024
10172090
9507
NM-0605
9517
9565
9513.a
9516
6090
9512
9475
HM-2830
9519
9473
NM-1812
9472
9520.1
9568
9521
9520.a
9520
9500.A
10629009
NM-1801
9508
10172090
10172041
9509
10172043
9506
9565
10622024
5021
10172090
NM-1801
10629009
9513.a
6090
9512
9516
9474
HM-61225
9172.a
10118
HM-2816
10624016
4329.a
4329.a
9650.023
9606.a
9651.085
9651
9280
9562
10621026
10170031
9724.1
9717
9652.b
9562
10170031
9716
6090
10621026
9730
9613.S
10172090
9654
9612
5021
10622024
9724.1
HM-2816
NM-1812
10622024
5021
10172091
9552
9557
9559
9554
10172041
NM-31205
9562
9653
HM-61280
ALL THREAD
10620064
NM-1812
9613.s
9656
10170031
10621026
9713
HM-61225
9525
500003
500005
500007
NM- 51605
NM-1812
4502
66006215
10620069
10629011
NM-21015
HM-41020
10020094
W-1610
CB-1214
CB-8X22MM
20062141
N-1001
4515
9555.a
10591905
9553.b
NM-51605
9548.B
9548.BS
4501

PART No.	DESCRIPTION
4329 . a	Snapring
4501	V BOLT 5 X 5, 16MM
4502	U BOLT 5 X 5, 16MM
4515	BEARING AND FLANGETTE
5021	Self lubricated bushing
6090	Snapring, 6mm
7085 . da	Drop tube, right hand
7085 . ga	Drop tube, left hand
7088 . 2	Clip, for hopper lid
7088 . a	Lid, hopper, with clip (7088.2)
9158	Spring (holds on extra sprockets)
9172 . a	Chain, 5R(106 links w/conn. link)
9280	Bushing, nylon w/square hole
9472	Clamp Mounting Bracket, Bottom (9523 Complete)
9473	Clamp Mounting Bracket, Top (9523 Complete)
9474	LEVER LIFT
9475	
9500 . a	HALF HOUSING MICROSEM METER
9502 . d	Plastic hopper only, 25 liter, -'03
9504	Steel base (hopper to meter)
9505 . a	Rubber skirt
9506	pins)
9507	Worm gear, lft(reqrs 6x25 roll pin)
9508	Worm gear, rht(reqrs 6x25 roll pin)
9509	Central metering gear(requires 4x25 roll pin)
9512	TRAP DOOR
9513 . a	SEAL TRAP DOOR
9516	Spring for trap door
9517	Bolt (fastens housings together)
9519	Rubber plug
9520	Two outlet chute (towards the front)
9520 . 1	Single outlet
9520 . a	Two outlet chute (towards the rear)
9521	Rubber plug for side of chute
9522	Hose (specify length)
9525	END CAP MICROSEM BAR
9548 . b	SUPPORT BAR INSECTICIDE
9548 . bs	SUPPORT BAR INSECTICIDE 7X7
9552	Bushing, requires 2-4x25 & 1-6x30 roll pin
9553 . b	Chain microsem drive
9554 3	Sprocket, 12 tooth, 5R(standard)
9554 . 4	Sprocket, 13 tooth, 5R
9554 . 5	Sprocket, 14 tooth, 5R
9554 . 6	**Sprocket, 15 tooth, 5R(standard)**
9554 . 7	Sprocket, 16 tooth, 5R
9554 . 9	Sprocket, 18 tooth, 5R(standard)
9554 . 11	Sprocket, 20 tooth, 5R
9554 . 13	Sprocket, 22 tooth, 5R(standard)
9554 . 16	Sprocket, 25 tooth, 5R(standard)
9554 . 21	Sprocket, 30 tooth, 5R(standard)
9554 . 26	Sprocket, 35 tooth, 5R
9555 . a	Double sprocket, 12-25 tooth, 5R(hex bore)
9557	Lynch pin, small(6mm)
9559	Bushing (17mmID x 25mmOD, 10mm long)
9562	Chain Roller (G12AS)
9565	Rubber O-ring
9568	Hose clamp (for 9522)
9574	Plate for hopper (to convert to single outlet)
9606 . a	Sprocket, 20 tooth, 5R, top dr shaft(square)

PART No.	DESCRIPTION
9612	pins)
9613 . S	Spring, Chain Tightener H.D.
9645	Protective Sleeve
9650 . O23	LINKAGE
9651 . O85	**Drive shaft(outer), 33-1/2" long**
9652 . b	Support Bracket
9653	CHAIN TIGHTENER
9654	DOUBLE INTERMEDIATE SPRKT 12-20T
9656	Support arm (for drive frame)
9661	Female half of sliding drop tube assy
9662	Male half of sliding drop tube assy
9713	
9716	Pivot pin weldment
9717	Shield for drive chain
9724 . 1	Shield keeper bolts
9730	
10118	Grease zerk, 6mm, straight
500003	MICROSEM TOOLBAR 2M50
500005	MICROSEM TOOLBAR 3M50
500007	MICROSEM TOOLBAR 4M50
900236	BUNGI CORD 5/32 X 10
10020094	
10170031	Split Pin, 3.5 x 25
10172041	Roll pin, 4 x 25
10172043	Roll pin, 4 x 36
10172090	Roll pin, 6 x 25
10172091	Roll Pin 6 x 30
10219099	
10530096	SCREW 6X25, PHILLIPS HEAD
10591905	
10603016	Jam Nut 16-2.0Metric
10620064	Washer, 8.5 x 16 x 2
10620069	WASHER 8.5X20X1.5
10621026	Washer, 13 x 18 x 2mm
10622024	Washer, 16 x 26 x 1
10622044	Washer, 17 x 30 x 2
10624016	Washer, 31 x 41 x 2mm
10629009	Lock Washer, ext tooth 8mm
10629011	Lock Washer, Ext tooth 10mm
20062141	
64014051	Clean out Chute
66006215	
CB-1214	5/16-18 X 1-1/4 CARRIAGE G5 Z
HM-2816	Hex Bolt, 8-*1.25 x 16 G8.8
HM-2816	Hex Bolt, 8-1.25 x 16 G8.8
HM-2830	Hex Bolt, 8-1.25x30 G8.8
HM-41020	HEX BOLT 10-1.5 X 20 G8.8
HM-61225	Hex bolt, 12 x 25
HM-61280	HEX BOLT 12-1.75 X 80 G8.8
N-1001	5/16-18 FIN HEX NUT G5 ZY
NM-0605	Nylon Lock Nut, 6mm G8.8
NM-1801	8 X 1.25 HEX NUT G8.8
NM-1812	Nylon Lock Nut, 8mm G8.8
NM-21015	10MM NYLON LOCK NUT G8.8
NM-31205	Nylon Lock Nut, 12mm G8.8
NM-51605	NYLON LOCK NUT 16 MM G8.8
W-1610	5/16 LOCK WASHER YZ G8

PARTS INDEX - 5X5 MOUNTED

	PAGE
TOOLBAR	
5X5 STANDARD HITCH	P-1
5X5 ADVANCED HITCH	P-3
5X5 HITCH COMBO	P-5
5X5 HITCH COMBO SET BACK	P-7
5X5 DOUBLE TOOLBAR	P-9
TRANSMISSION/HYDRAULIC DRIVE	
5X5 CLUSTER TRANSMISSION	P-11
HYD MOTOR DRIVE, 5X5	P-13
HYDRAULIC DRIVE MOTOR	P-15
WHEELBLOCKS	
DRIVE WHEELBLOCK, FIXED	P-17
DRIVE WHEELBLOCK, ADJUSTABLE	P-19
TURBOFAN	
STD OUTPUT TURBOFAN	P-21
HIGH OUTPUT TURBOFAN	P-23
EXTRA HIGH OUTPUT TURBOFAN	P-25
TURBOFAN MOTOR	P-27
VACUUM & PRESSURE GAUGES	P-29
ROW UNIT	
5X5 STANDARD LINKAGE	P-31
5X5 LINKAGE SPRINGS	P-33
BASE UNIT, 5X5 NG+4	P-35
NG+4 METER BASE	P-37
METER COVER NG+4	P-39
GAUGE WHEELS	P-41
SEED TUBES, NG+4	P-43
PRO WHEEL	P-45
2 BUSHEL STD HOPPER	P-47
2 BUSHEL TWIN-ROW HOPPER	P-49
3 BUSHEL HOPPER	P-51
3 BUSHEL HOPPER REVERSED	P-53
2 BUSHEL HOPPER (NEW)	P-55

	PAGE
CLOSING WHEELS	
CLOSING WHEEL, SYMETRICAL	P-57
CLOSING WHEEL, TWIN-ROW	P-59
CLOSING WHEEL, OPEN STD	P-61
CLOSING WHEEL, NARROW ECC	P-63
CLOSING WHEEL, UNR	P-65
CLOSING WHEELS RUBBER/CAST IRON	P-67
DISC CLOSING W/FLAT PRESS WHEEL	P-69
DISC CLOSING W/FLAT PRESS WHEEL, TR	P-71
ATTACHMENTS	
VACUUM BAZOOKAS	P-73
ROW MARKER, 5X5 XTRA-SMALL	P-75
ROW MARKER, 5X5 SHORT	P-77
ROW MARKER, 5X5 MEDIUM	P-79
YETTER RESIDUE MANAGER, SINGLE WHEEL	P-81
YETTER, NO-TILL COULTER	P-83
YETTER HEAVY DUTY COULTER	P-85
CLOD REMOVER, UNIT MOUNTED	P-87
5X5 FERTILIZER DOUBLE DISC OPENER	P-89
5X5 DRY FERTILIZER DRIVE	P-91
5X5 DRY FERTILIZER TANK	P-93
5X5 MICROSEM DRIVE	P-95

PAGE INTENTIONALLY LEFT BLANK

Please record you planter identification information in box below for reference when ordering replacement parts for your Monosem planter.

Planter Type:_____

Serial Number:_____

Purchase Date:_____

Dealership:_____

_____

_____

Suggestions For Successful Planting:

1. Choose a reasonable working speed adapted to the field conditions and desired accuracy.

2. Check proper working of the seed metering, seed placement, spacing, and density when starting up and from time to time during planting.

Monosem Inc. Product Warranty

A. **General Provisions**. Monosem Inc. ("Monosem") warrants each new product manufactured by Monosem ("Product(s)") to be free, under normal use and service, from defects in workmanship and materials for a period of one (1) year from the date of delivery (the "Term"). Monosem makes this warranty to original purchasers of Products from the original delivery date. This warranty is transferable, provided Monosem is notified of the ownership change and Monosem approves the warranty transfer.

B. **Warranty Claims**. During the Term, this warranty shall be fulfilled by repairing or replacing free of charge any Product that shows evidence of defect in workmanship or materials. To secure warranty service, the purchaser must 1) report the Product defect to an authorized Monosem dealer (a list of authorized Monosem dealers is available on Monosem's website, http://monosem-inc.com/dealer-map/), 2) present evidence of the warranty start date with valid proof of purchase, and 3) make the Product available to Monosem or an authorized Monosem dealer within a reasonable time. Parts and standard labor rates are covered by this warranty. Freight charges for defective Products are not covered by this warranty and are the responsibility of the purchaser.

C. **Exclusions**. Excluded from this warranty are: 1) Used Products; 2) repairs or replacements caused in whole or in part by parts or components not manufactured by or obtained from Monosem or by service not performed by Monosem authorized personnel or an authorized Monosem dealer; 3) any Product that has been altered or modified in ways not approved by Monosem, including but not limited to the use of unapproved attachments (including residue managers and coulters), accessories (including third-party drives and fertilizer pumps), carts or tanks; 4) depreciation or damage caused by normal wear and tear, lack of reasonable and proper maintenance, failure to follow operating instructions/recommendations, misuse, lack of proper protection during storage, vandalism, the elements, collision or accident; and 5) normal maintenance parts and/or service, including but not limited to calibrations, adjustments, inspections, and any consumables, including but not limited to tires, belts and rubber products and wear parts.

D. **No Other Express Warranty and no Implied Warranty, Representation or Condition**. No other express warranty is given and no affirmation of Monosem or an authorized Monosem dealer by words or actions, shall modify the terms or limitations of this warranty in any way. No retailer has any authority to make any warranty, representation, condition or promise on behalf of Monosem, or to modify the terms or limitations of this warranty in any way. Monsem shall not be liable for damages, including special, incidental or consequential damages or injuries (damage and repairs of equipment itself, loss of profits, rental or substitute equipment, loss of good will, etc.) arising out of or in connection with performance of the Product or its end use, and Monosem shall not be liable for any indirect, special, incidental, punitive or consequential damages arising out of or in connection with Monosem's failure to perform its obligations hereunder. Purchaser acknowledges that it is not relying on Monosem's skill or judgment to select Products for any purpose and that there are no warranties which are not contained in this warranty. In no event shall Monosem's tort, contract, or warranty liability exceed the purchase price of the Product.

TO THE EXTENT PERMITTED BY LAW, MONOSEM'S ENTIRE LIABILITY AND THE PURCHASER'S EXCLUSIVE REMEDY SHALL BE REPAIR OR REPLACEMENT OF PRODUCTS COVERED UNDER THIS WARRANTY. THIS WARRANTY IS IN LIEU OF ALL OTHER WARRANTIES, EXPRESS OR IMPLIED, INCLUDING, BUT NOT LIMITED TO THE IMPLIED WARRANTY OF MERCHANTABILITY OR FITNESS FOR A PARTICULAR PURPOSE.

MONOSEM-INC.com

MONOSEM

Enhanced precision

P: 913.438.1700

F: 913.438.5455

Monosem, Inc.

1001 Blake St. • Edwardsville, KS 66111